# Superconducting RF for ERLs of eRHIC

## *& recent progress at R&D ERL*

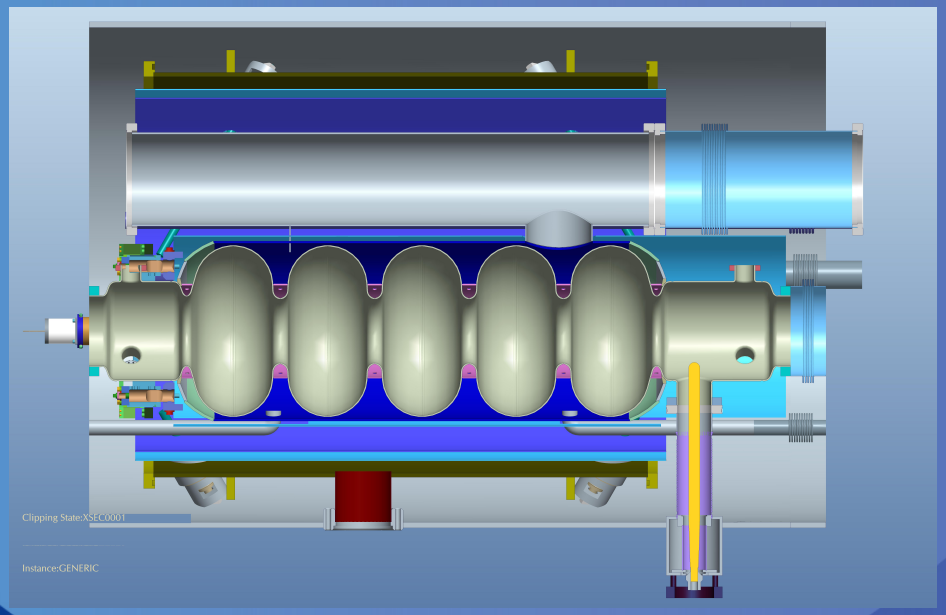


*Sergey Belomestnykh*
*Collider-Accelerator Department, BNL*
*October 18, 2011*

**ERL 2011 Workshop**
KEK • October 16-21, 2011

BROOKHAVEN NATIONAL LABORATORY
*a passion for discovery*

U.S. DEPARTMENT OF ENERGY | Office of Science

# Acknowledgements

Below is a (incomplete) list of colleagues I would like to thank for contributing to SRF development at BNL.

**BNL**: Z. Altinbas, I. Ben-Zvi, R. Calaga, D. Gassner, H. Hahn, L. Hoff, L. Hammons, P. Jain, J. Jamilkowski, E. Johnson, D. Kayran, J. Kewisch, N. Loudakis, D. Lederle, V. Litvinenko, G. Mahler, G. McIntyre, C. Pai, D. Pate, D. Phillips, C. Schulheiss, S. Seberg, T. Seda, B. Sheehy, K. Smith, T. Tallerico, R. Than, J. Tuozzolo, D. Weiss, Wencan Xu, A. Zaltsman

**JLab**: A. Burill

**AES**: C. Astefanous, M. Cole, A. Favale, D. Holmes, J. Rathke, T. Schultheiss

# SRF systems in eRHIC

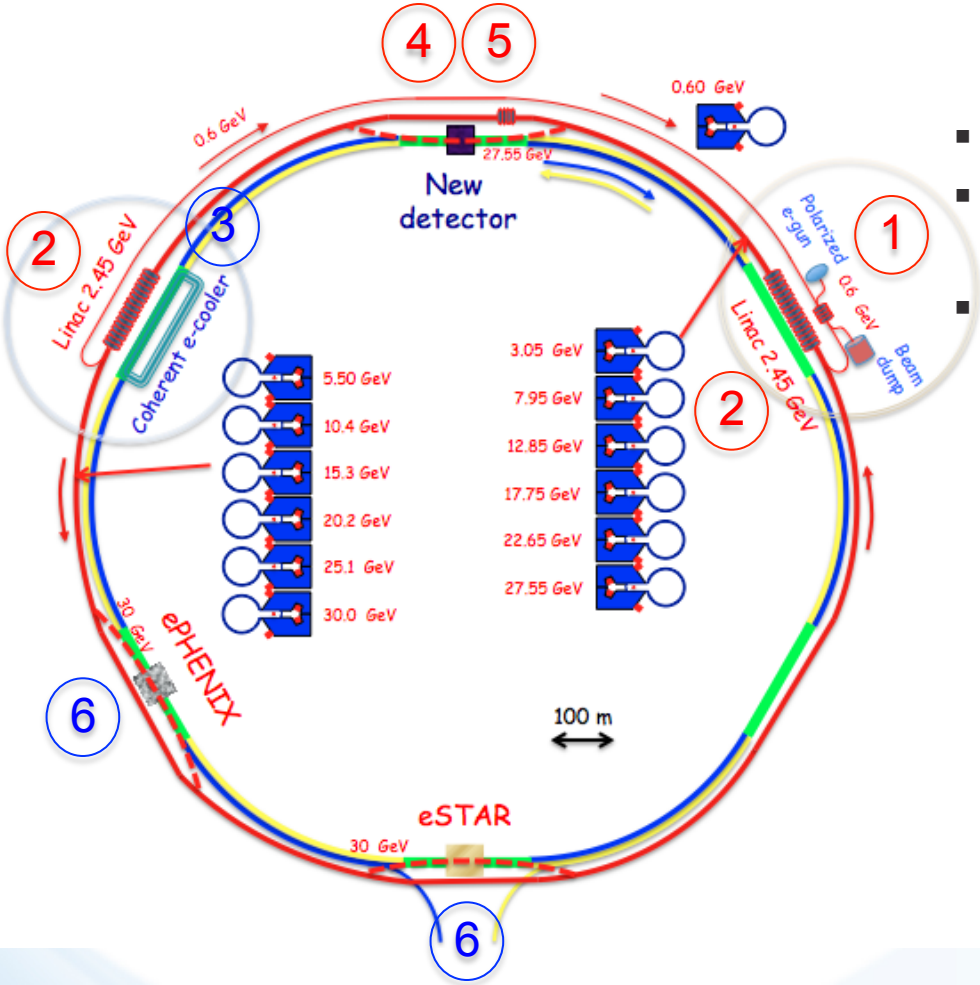


- eRHIC is a future collider, where hadrons of RHIC will interact with electrons of a 6-pass ERL.
- Maximum energy of protons is 250 GeV.
- Maximum energy of 6-pass ERL is 30 GeV, with 5-GeV Phase I
- There will be the following SRF systems:

① Main ERL injection systems: 10-MeV SRF injector linac and a 600-MeV single-pass 704-MHz ERL.

② Two main SRF linacs, forming a 6-pass ERL.

③ A 136-MeV 704-MHz ERL for Coherent electron Cooling (CeC) of hadron bunches in RHIC with a 113-MHz QWR SRF gun and 338-MHz buncher.

④ 1408-MHz (second harmonic) SRF linac for energy loss compensation.

⑤ 5$^{th}$ (or 7$^{th}$) harmonic SRF linac for energy spread compensation with a short 2$^{nd}$ harmonic section to make it energy-loss neutral.

⑥ SRF crab cavities for hadrons (169 MHz) and electrons around detectors. The former system will include 2$^{nd}$ and 3$^{rd}$ harmonics cavities for linearization.

# 704 MHz ERLs

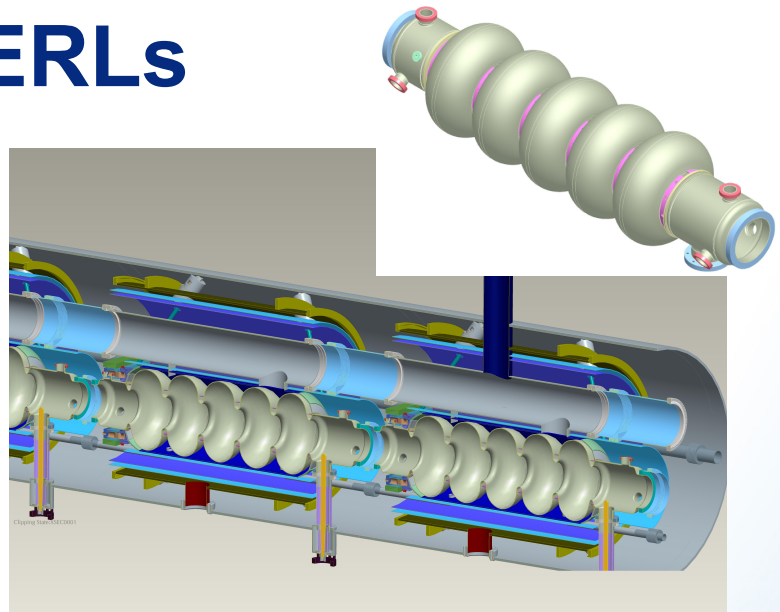

- All three ERLs (Main linac, 600-MeV injector and 177-MeV CeC linac) will use the same linac technology with minor adjustments.
- Main parameters of these linacs are listed in the table.

| | Main Linac | Injector ERL | CeC ERL |
|---|---|---|---|
| Energy gain [MeV] | 2450 | 590 | 136 |
| # of passes | 6 | 1 | 1 |
| Ave. beam current [mA] | 50* | 50* | 70 |
| Linac length [m] | 200 | 60 | 19 |
| # of cavities | 120 | 30 | 8 |
| $E_{acc}$ [MV/m] | 19.2 | 18.5 | 15.1 |

*) for E ≤ 20 GeV

# Energy loss compensator

- The energy loss compensator is a second harmonic (1408 MHz) SRF linac, which will compensate 9.8 MW of power lost to synchrotron radiation, HOMs, and resistive walls.
- The linac will be located in IP12, only in the high energy pass.
- As the main limitation for these cavities for 20 GeV parameters comes from RF power (set to 100 kW per FPC, 2 FPCs per cavity), they will operate at relatively low gradient of 9.4 MV/m.

| Energy loss compensator | at 20 GeV | at 30 GeV |
|---|---|---|
| Energy gain [MeV] | 98 | 389 |
| # of passes | 1 | 1 |
| Ave. beam current [mA] | 50 | 12.6 |
| Linac length [m] | 21 | 43 |
| # of 2-cell cavities | 49 | 100 |
| $E_{acc}$ [MV/m] | 9.4 | 18.3 |
| Beam power per cavity [kW] | 200 | 98 |

The 2-cell cavity will look similar to the 1300-MHz Cornell ERL Injector cavity shown here:

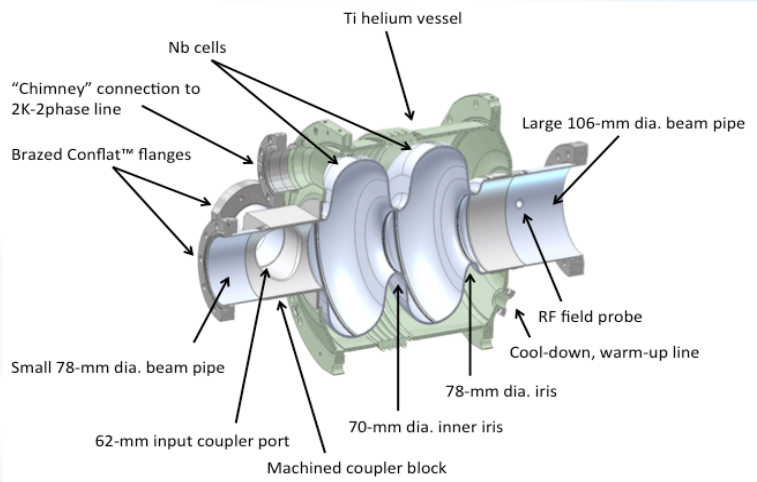

# Main SRF linacs in eRHIC

- Six-pass ERL with two 2.45 GeV, 703.8 MHz superconducting RF linacs in IP2 and IP10.
- Each linac is 200 m long, installed in the existing RHIC tunnel.
- The energy will be increased from 5 to 30 GeV in stages by increasing the main linac length.

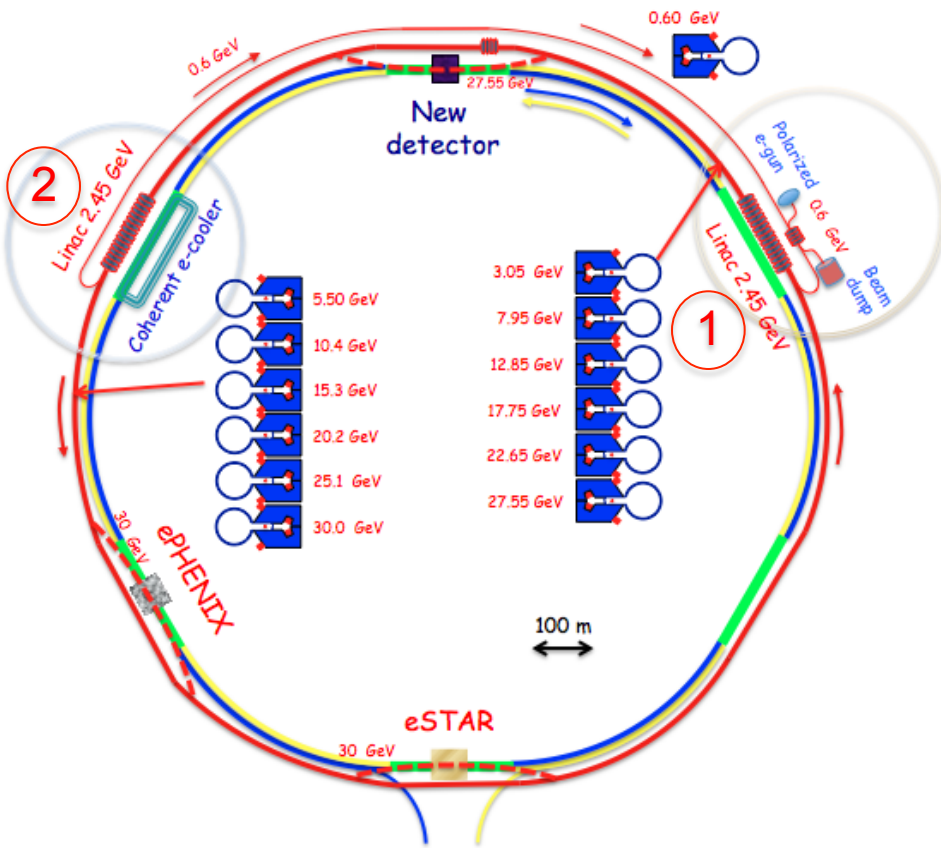


| | |
|---|---|
| Energy per linac (max) | 2.45 GeV |
| Average beam current per pass (E ≤ 20 GeV) | 50 mA |
| Bunch frequency | 14.1 MHz |
| Bunch length | 2 mm rms |
| RF frequency | 703.8 MHz |
| Linac length | 200 m |
| Number of cavities per linac | 120 |
| Filling factor | 0.64 |
| Cavity type | elliptical |
| $E_{acc}$ (max) | 19.2 MV/m |
| Peak microphonics detuning | 6.0 Hz |
| RF power per cavity | 10 kW |
| Cavity loss factor | 3.5 V/pC |
| Cavity $Q_0$ | $4 \times 10^{10}$ |
| Operating temperature | 1.9 K |

# Linac layout

- The linac will consist of two long cryomodules, connected in the middle to the cryogenic system operating at 1.9 K.
- At each end of the linac there will be a 1 meter long endcap transition to room temperature.
- Each cryomodule will be made of single-cavity cryounits.

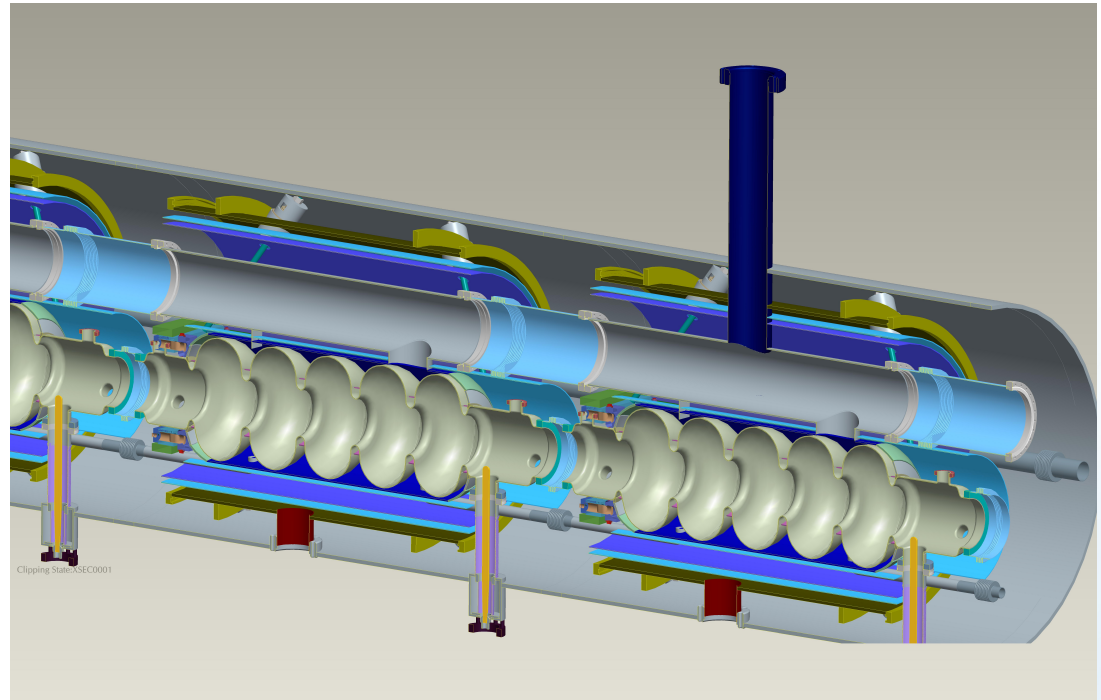

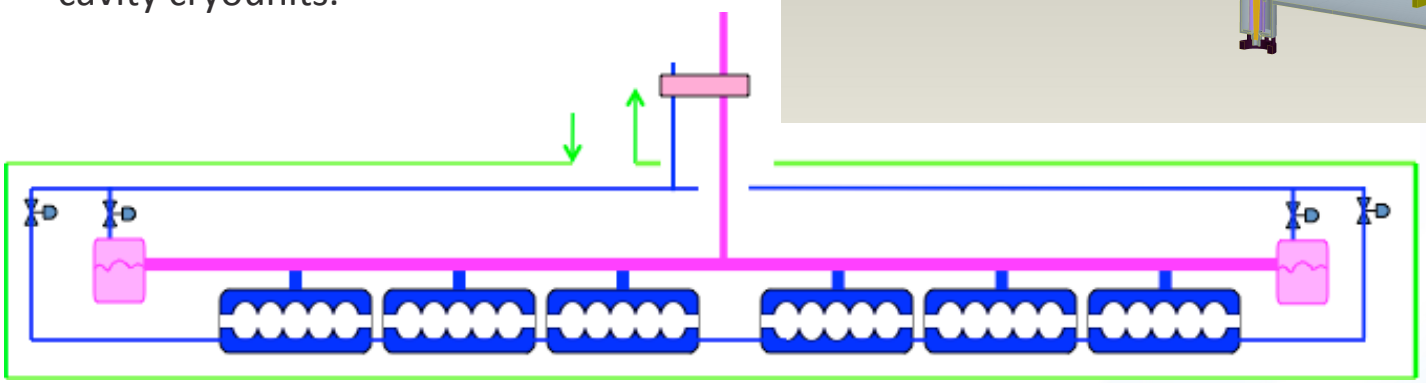

- To fit into available space in the IPs, we are designing very compact cryounits with short, 8-cm, interconnects between them.
- There will be no quadrupole lenses inside the cryomodules.
- The linac filling factor will be 0.64 resulting in the real estate gradient of 12.3 MV/m.

# Main linac in IP2

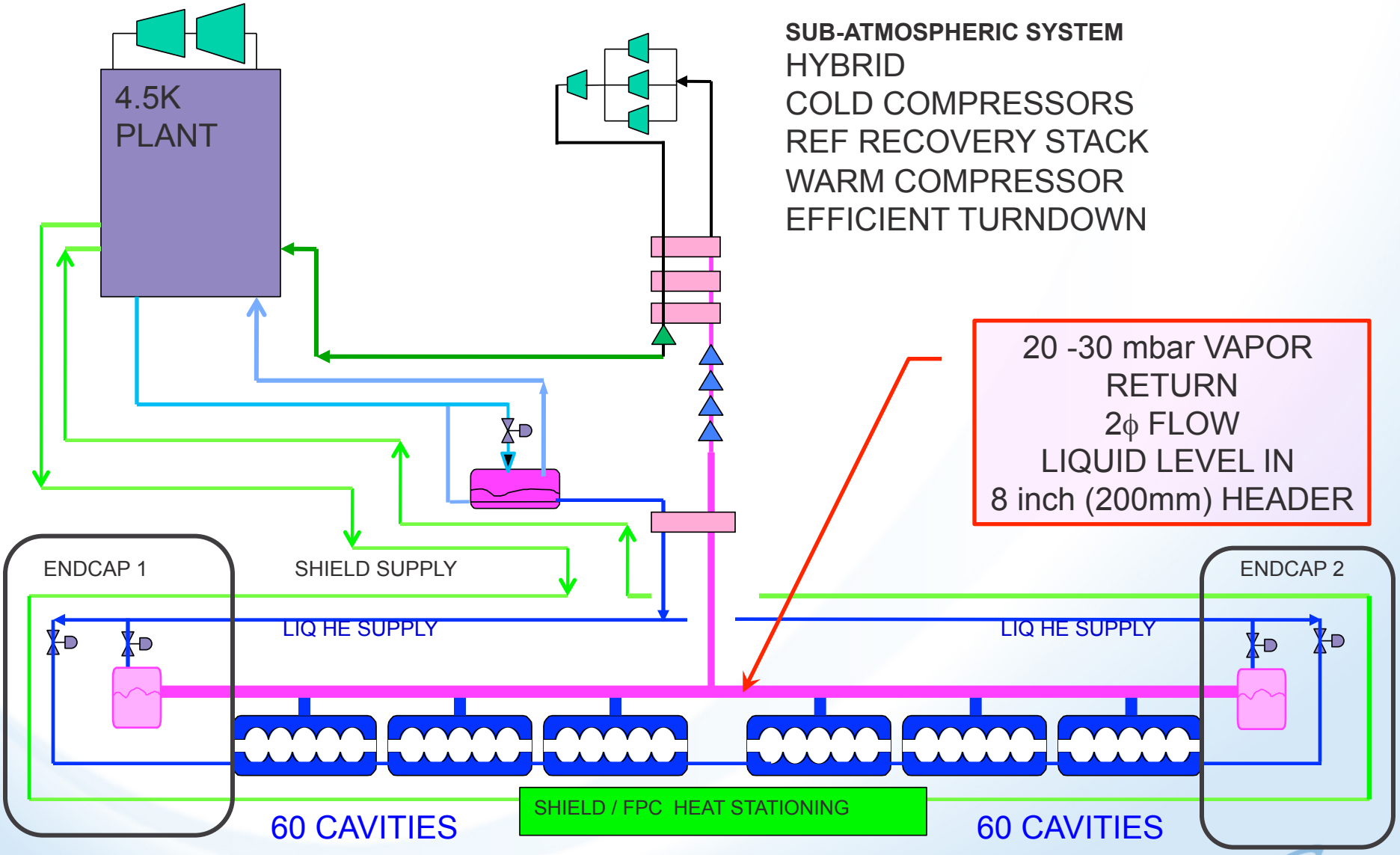

# Cryounit layout

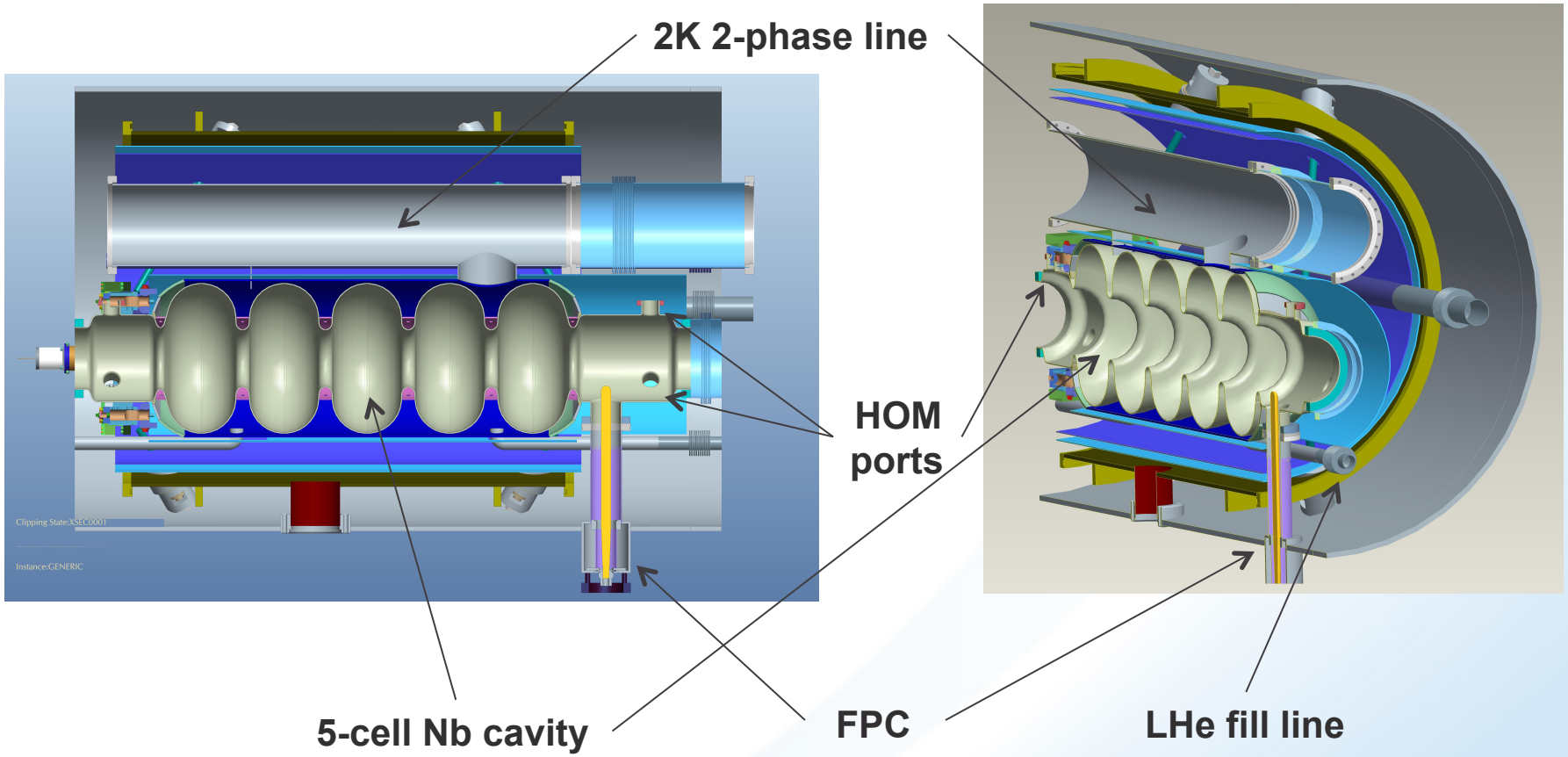

# Cryounit layout (2)

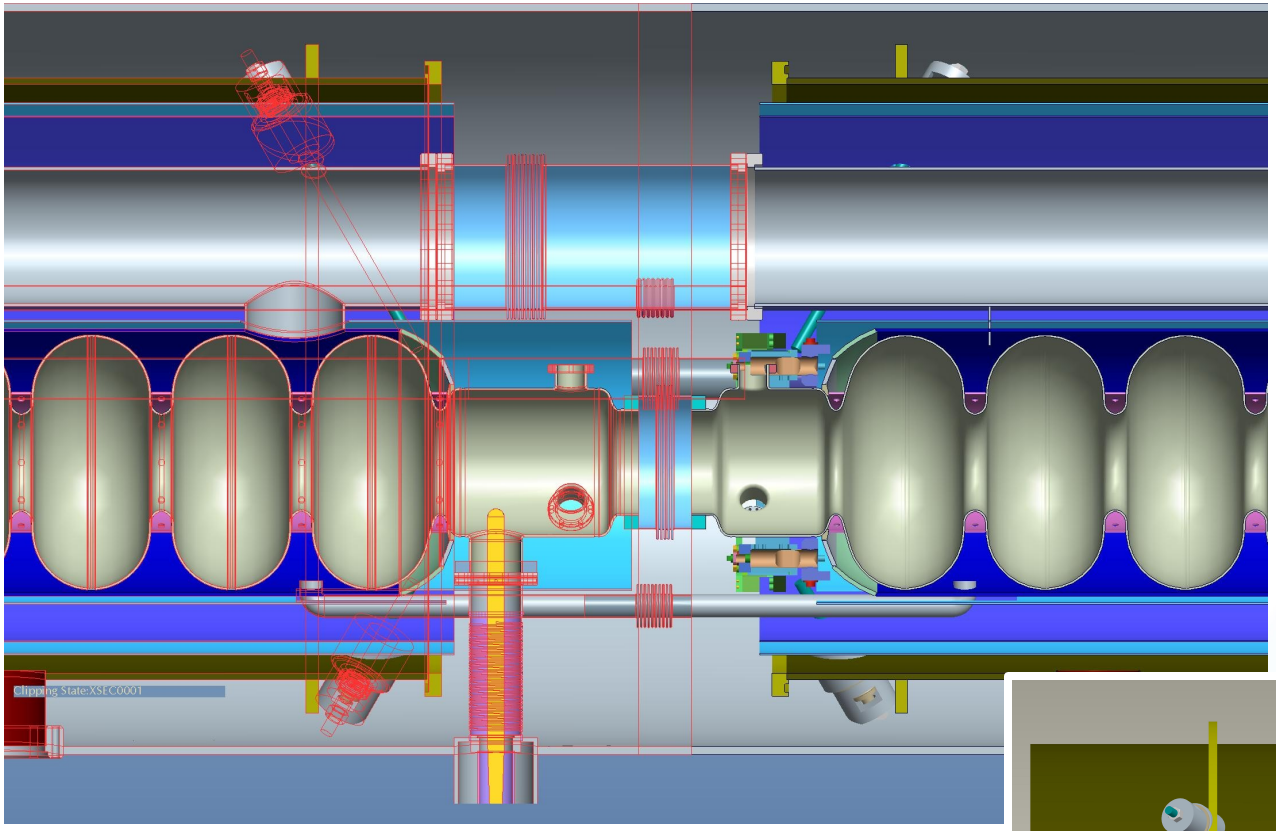


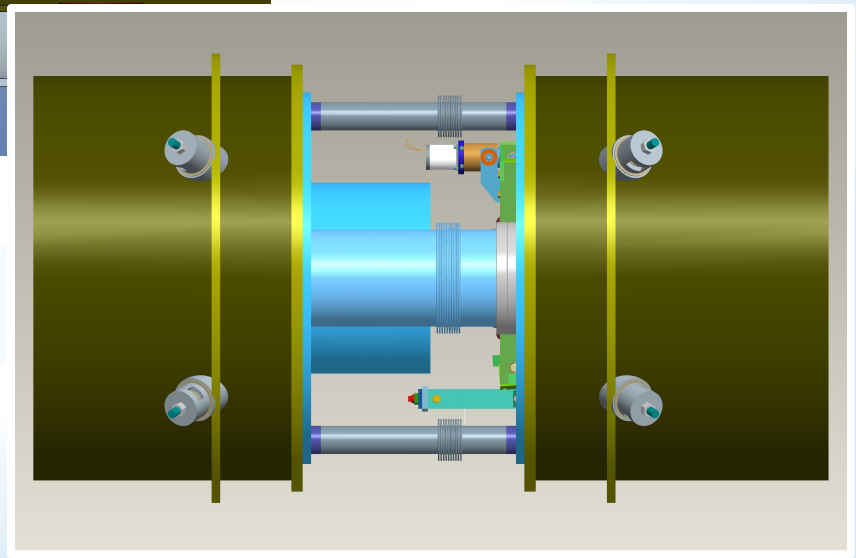

# Five-cell SRF cavity with strong HOM damping

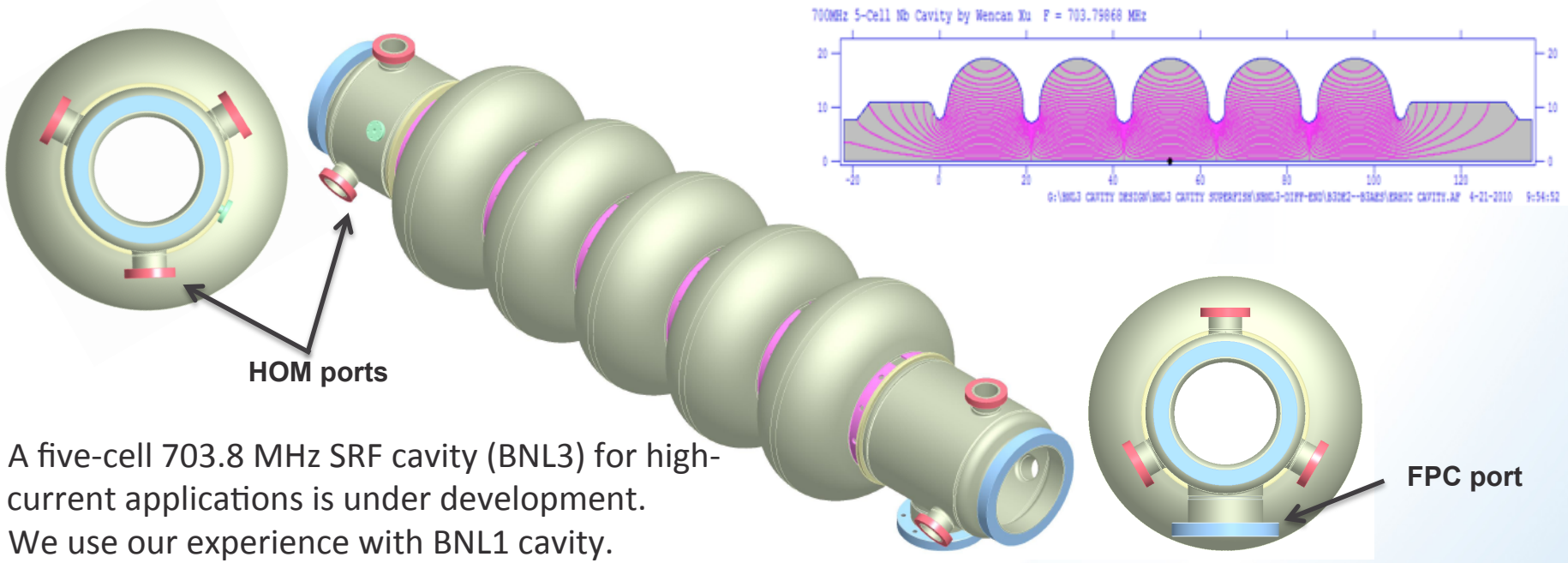


- A five-cell 703.8 MHz SRF cavity (BNL3) for high-current applications is under development.
- We use our experience with BNL1 cavity.
- The cavity is optimized and designed for applications such as eRHIC and SPL.
- Reduced peak surface magnetic field -> reduced cryogenic load.
- Three antenna-type couplers will be attached to a large diameter beam pipes at each end of the cavity and will provide strong HOM damping while maintaining good fill factor for the linac.
- HOM tolerances from BBU simulations.
- The cavities will operate at 19.2 MV/m.

| Parameters | BNL1 | BNL3 |
|---|---|---|
| Frequency [MHz] | 703.5 | 703.8 |
| No. of cells | 5 | 5 |
| Geometry Factor | 225 | 283 |
| *R/Q* [Ohm] | 404.0 | 506.3 |
| $E_{pk}/E_{acc}$ | 1.97 | 2.46 |
| $B_{pk}/E_{acc}$ [mT/MV/m] | 5.78 | 4.26 |
| Length [cm] | 152 | 158 |
| Beam pipe radius [mm] | 120 | 110 |

# HOM damping

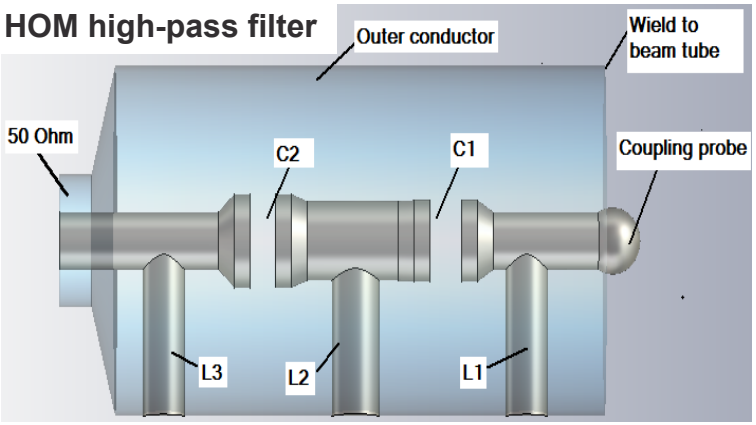


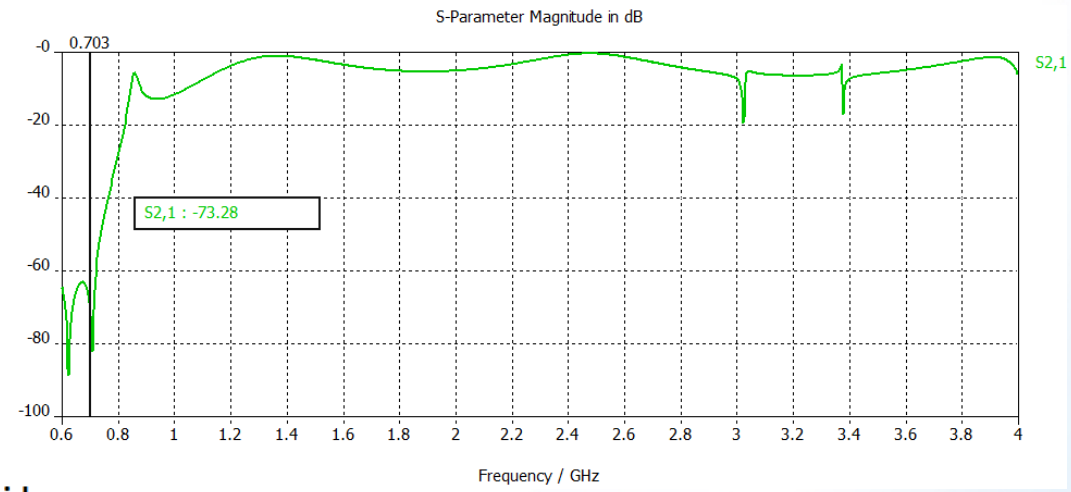


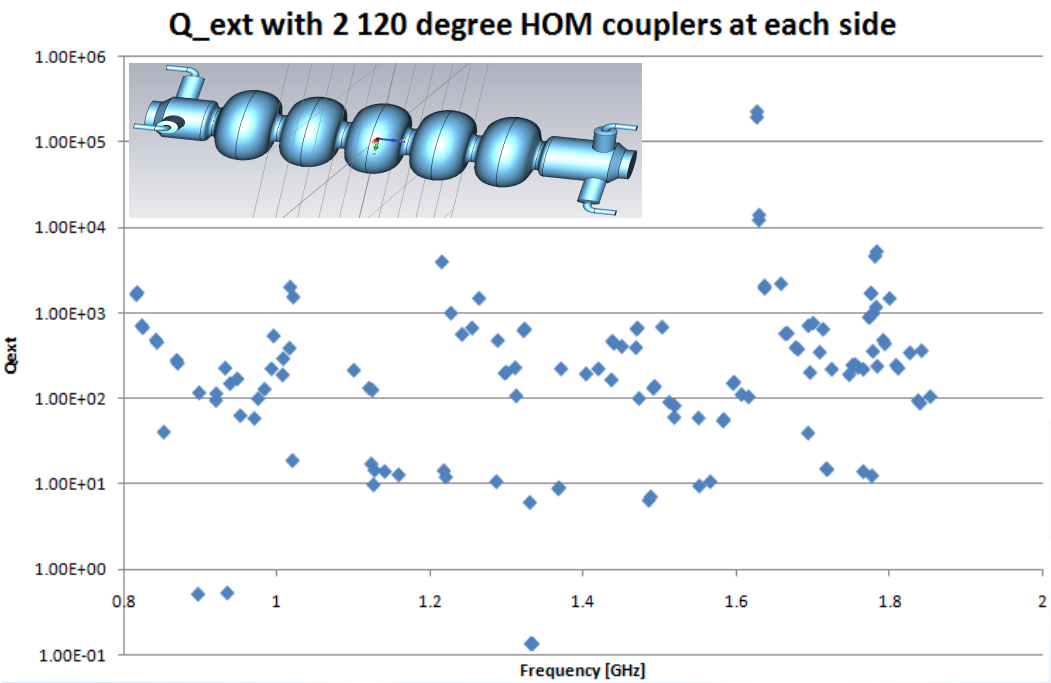


- A two-stage high-pass filter rejects fundamental frequency, but allows propagation of HOMs toward an RF load.
- 1st HOM is at 0.82 GHz.
- Total HOM power to extract is 7.3 kW per cavity (loss factor 3.5 V/pC).
- Simulated a model with 2 HOM couplers per side, simulation with 3 couplers is in progress.
- Modes at 1.62 GHz have R/Q of ~0.1 Ohm.
- $Q_{ext}$ required from BBU simulations for dipole modes is ~40,000.

# Cavity *Q* and cryogenic losses

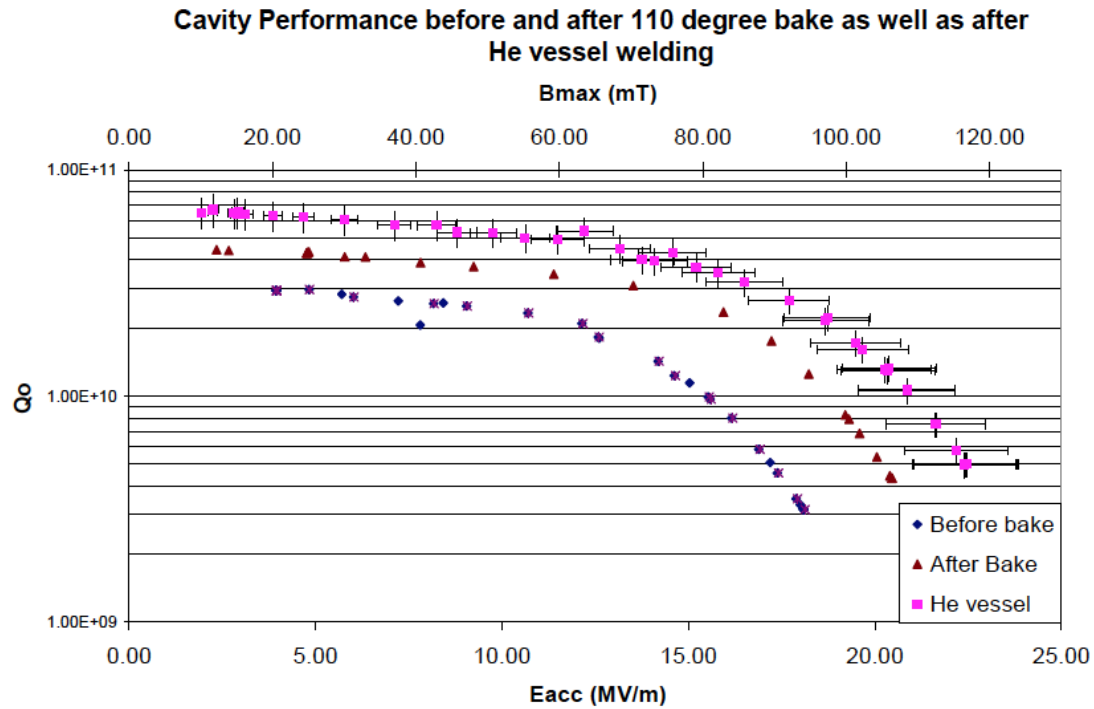


Figure 1. The plot of Qo vs Eacc for three tests on the 5 cell cavity. The blue circles are before the 110 degree bake, the red triangles are after the 110 degree bake and the pink squares are with the He vessel attached.

- Based on excellent performance of BNL1 cavity in vertical tests at 2 K ($R_s$ = 5.6 nOhm at 82 mT), one can predict BNL3 cavity $Q_0$ of $5 \times 10^{10}$.
- We assume $Q_0$ of $4 \times 10^{10}$, which gives dynamic loss of 20.7 W at 1.9 K.
- Other estimated cryogenic losses per cavity: 3 W static at 1.9 K and 50 W at 50 K (both static and dynamic).

# BNL3 cavity fabrication and testing plans

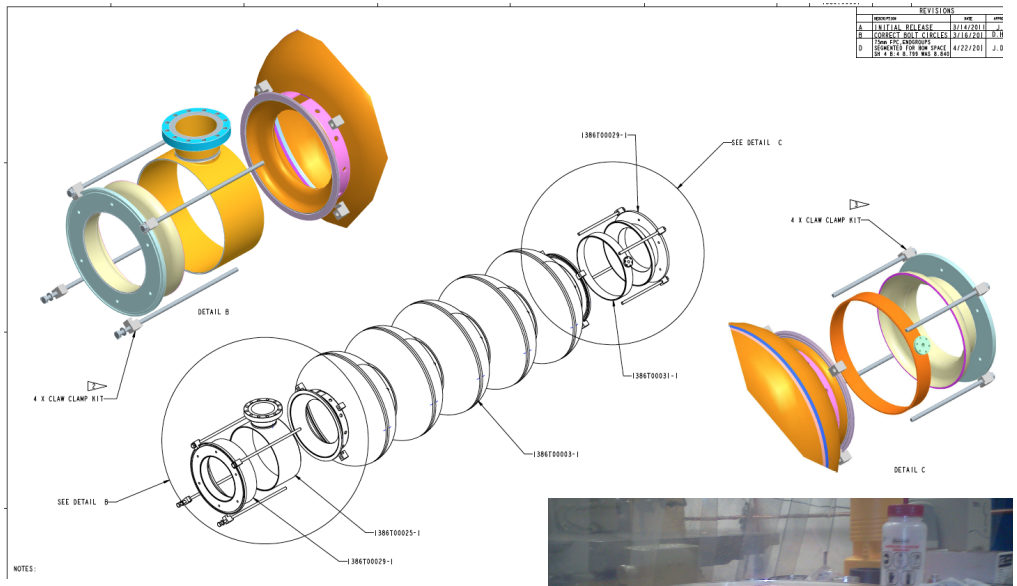

- Fabrication of the copper model is finished at AES.
- It will be used to study effectiveness of the new HOM couplers.
- After initial measurements of the copper model, fabrication of the niobium cavity will begin with the goal of completing it early next year.
- Further plans include vertical testing, study of multipacting in the cavity and HOM couplers, designing a cryomodule and ancillary components.

# R&D ERL

- The R&D ERL facility at BNL aims to demonstrate CW operation of ERL with average beam current in the range of 0.1-1 ampere, combined with very high efficiency of energy recovery.
- Gun-to-5-cell cavity (G5) setup is the first stage of the ERL beam commissioning.
- The goal of the G5 setup is to test critical ERL components with the beam and characterize the beam produced by the gun.
- The 5-cell SRF cavity is already installed and was cooled down several times to study its performance.

| | High Current | High charge |
|---|---|---|
| **Charge per bunch, nC** | **0.7** | **5** |
| Energy maximum/injection, MeV | 20/2.5 | 20/3.0 |
| R.m.s. Normalized emittances ex/ey, mm*mrad | 1.4/1.4 | 4.8/5.3 |
| R.m.s. Energy spread, dE/E | $3.5\times10^{-3}$ | $1\times10^{-2}$ |
| R.m.s. Bunch length, ps | 18 | 31 |
| Bunch rep-rate, MHz | 700 | 9.383 |
| Gun/dumped avrg. current, mA | 500 | 50 |
| **Linac average current, mA** | **1000** | **100** |
| Injected/ejected beam power, MW | 1.0 | 0.150 |
| Numbers of passes | 1 | 1 |

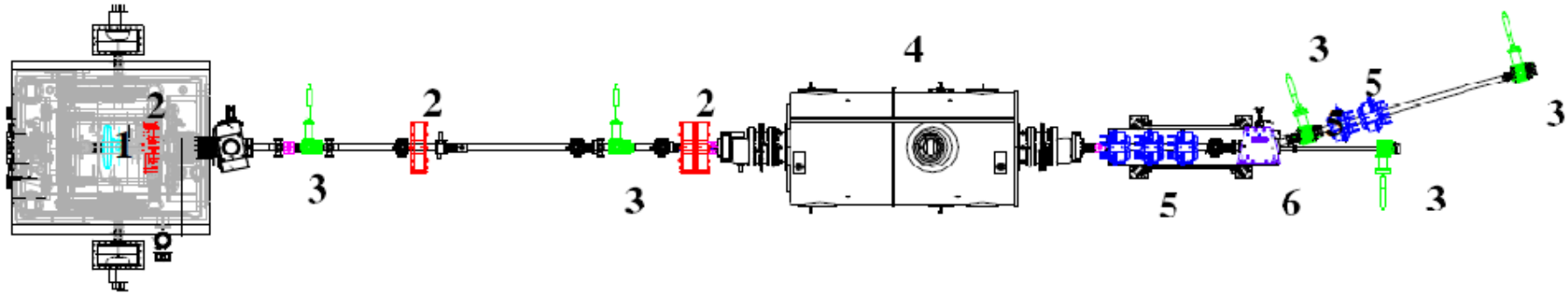


Figure 2: Detailed drawing of G5-test: 1 - 703MHz SRF gun; 2 – solenoids; 3 - beam profile monitors; 4- 5cell SRF cavity; 5-quadrupoles; 6-dipole magnet. 2.5 MeV electron beam from SRF gun propagates through a straight section with beam diagnostics: BPMs, pepper-pot, YaG/OTR screens. Then beam is accelerated in 5-cell cavity to 20 MeV.

# 5-cell cavity

- 5 cell SRF cavity, 17 cm iris, 24 cm beampipe
- 703.75 MHz, 20 MV/m @ $Q_0 = 1\times10^{10}$
- No trapped HOMs
- Cavity is inherently stiff, so no additional stiffeners are needed
- Coaxial FPC for power delivery
- Ferrite Dampers for HOMs
- 5 K heat intercept on beampipe
- Mechanical Tuner with 100 kHz tuning rang piezo provides 9 kHz fast tuning

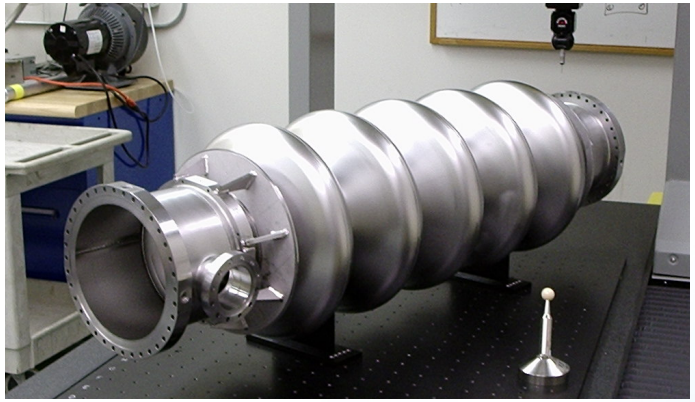

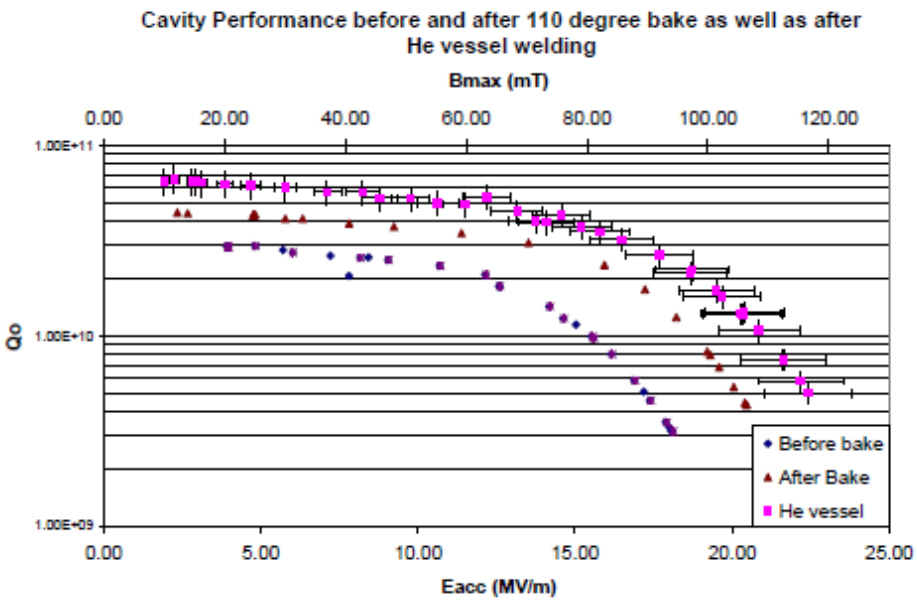


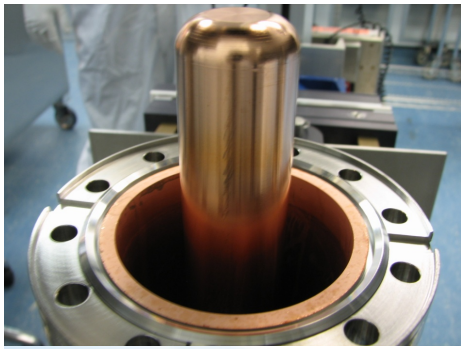

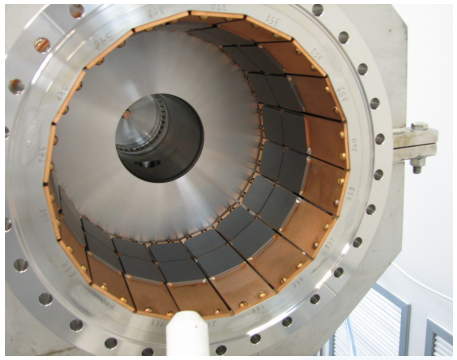

# Cryomodule

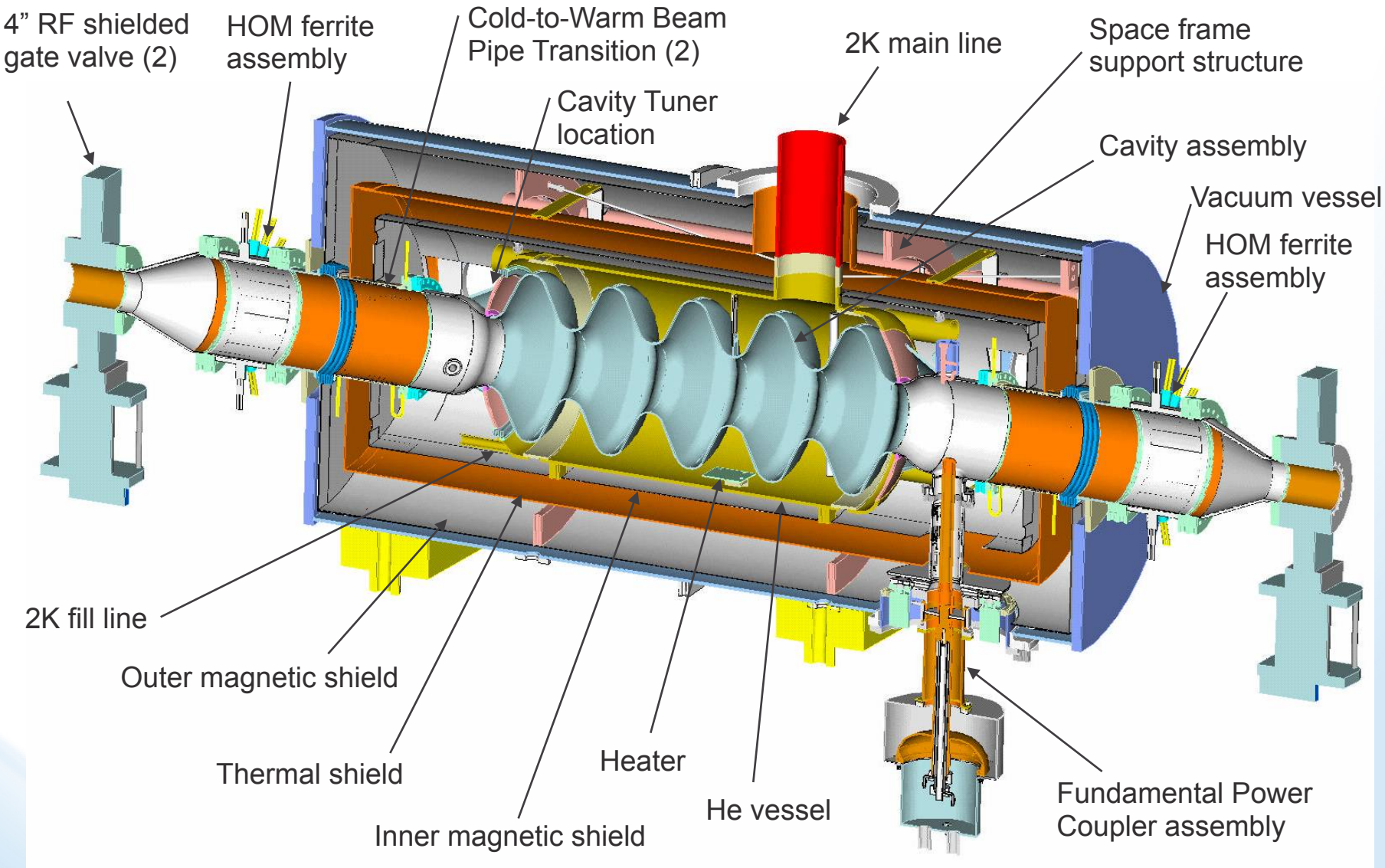
4” RF shielded gate valve (2)
HOM ferrite assembly
Cold-to-Warm Beam Pipe Transition (2)
Cavity Tuner location
2K main line
Space frame support structure
Cavity assembly
Vacuum vessel
HOM ferrite assembly
2K fill line
Outer magnetic shield
Thermal shield
Inner magnetic shield
Heater
He vessel
Fundamental Power Coupler assembly

# String assembly & installation

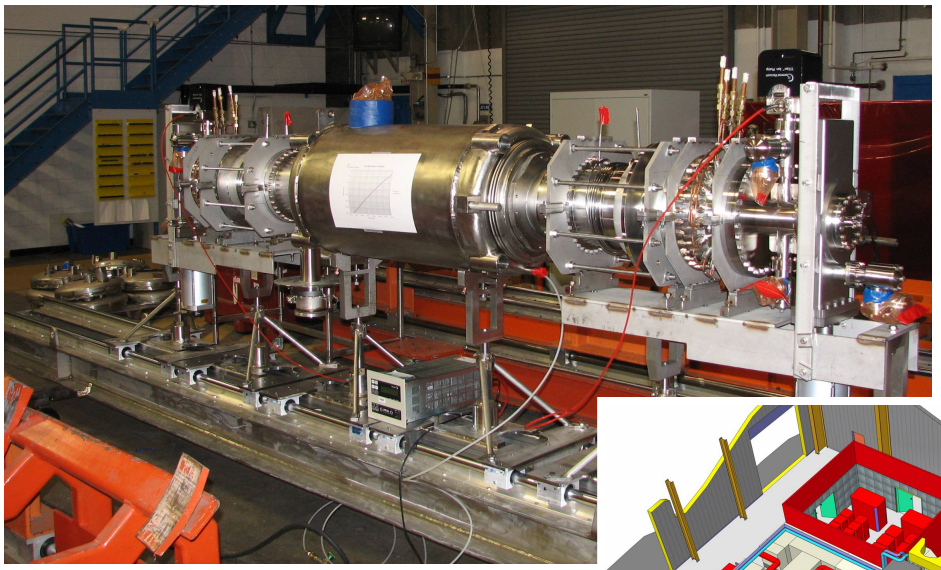

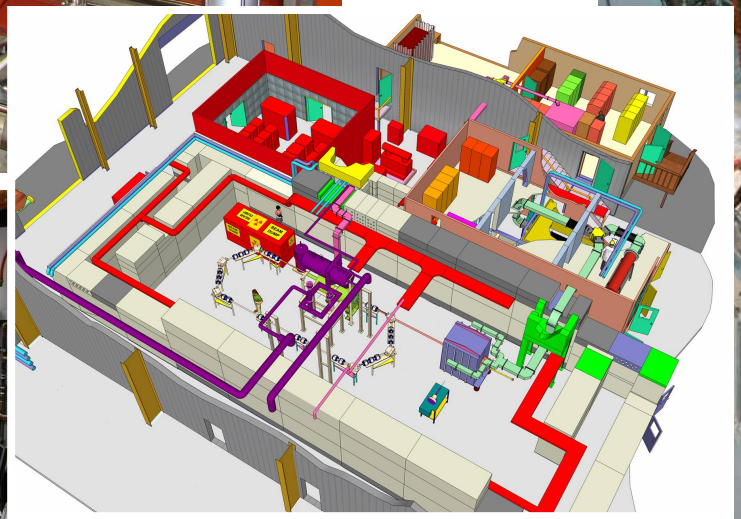

# Recent results

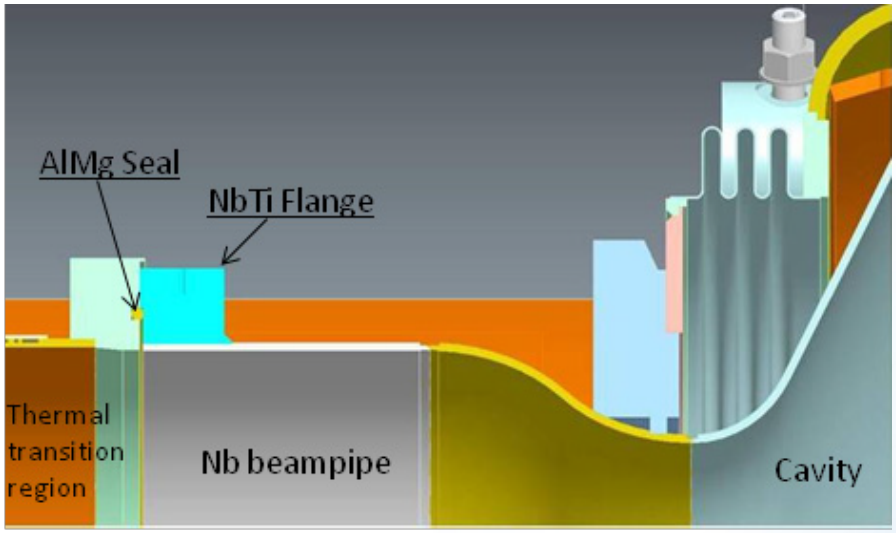


- To date the cryomodule has been tested 6 times.
- As the dedicated refrigeration system will be ready only in December of 2011, all tests were done via batch filling from dewars.
- The cavity operation is thermally limited to ~12 MV/m in CW mode.
- Initially it was thought that it is due to field emission, which prompted us to try Helium processing.
- However, careful look at the temperature data indicated overheating and eventually quench of the large beam pipe.
- The beam pipe is terminate in a NbTi flange, which is sealed with $AlMg_3$ hexagonal seal to a copper plated stainless steel flange. Beyond the stainless steel flanges are thermal transition regions, which are cooled by independent 5 K helium circuits.
- The primary cooling for the beam pipe is thus by conduction to the 2 K bath that cools the cavity, with the 5 K circuits minimizing the heat load from the transition region.

# Simulation results

- ANSYS simulations of the resistive heating and thermal transport confirmed that the source of the problem is the $AlMg_3$ seal and NbTi flange.
- The seal geometry leaves a ~1.25 mm gap allowing RF field to penetrate to the seal.
- At the point of thermal runaway RF magnetic seal at the flange is ~200 A/m.
- Due to poor thermal properties of NbTi, portion of the flange becomes normal conducting, generating additional heat.
- Once the flange raises temperature of the beam pipe above critical, the thermal runaway rapidly quenches the cavity.
- The thermal behavior of the flange would be OK with the cavity as originally designed.
- The flange was moved closer to the cavity in order to fit into JLab's BCP cabinet.

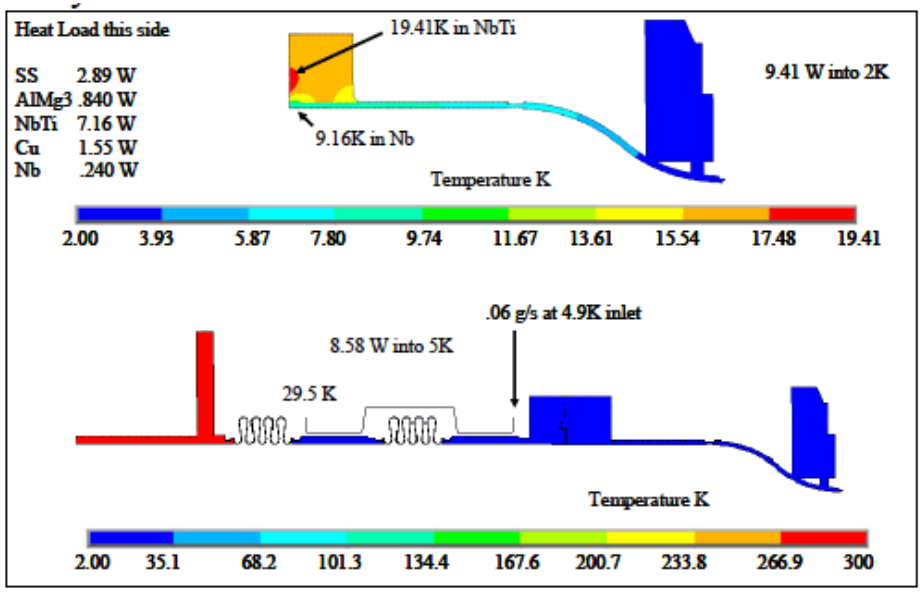


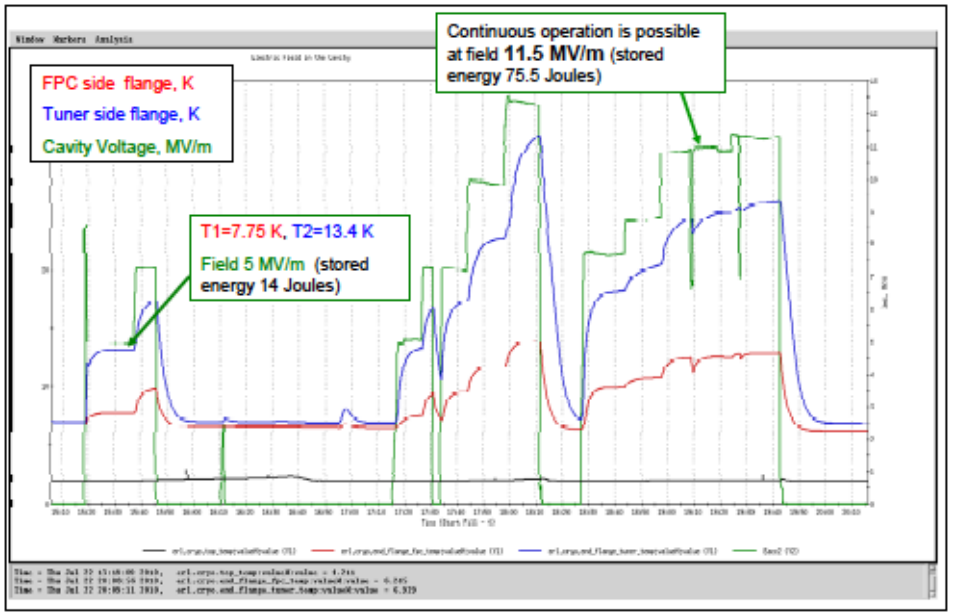

# Microphonics

- Noise is detected through an error signal of a PLL.
- The low-frequency noise, taken in CW at 2 MV/m, is dominated by two peaks, at ~16 Hz and ~30 Hz.
- The 30 Hz noise originates from the mechanical vibration of the pump used to cool down the system to 2 K.
- The 16 Hz microphonics noise was found to shift toward higher frequencies when the LHe level varies from top to bottom of the tube connecting the ballast tank to the cavity helium vessel. The 16 Hz line is associated with an acoustical resonance in this line.
- When its frequency reaches 30 Hz, there is a strong resonant excitation with an amplitude increase by more than a factor of five.

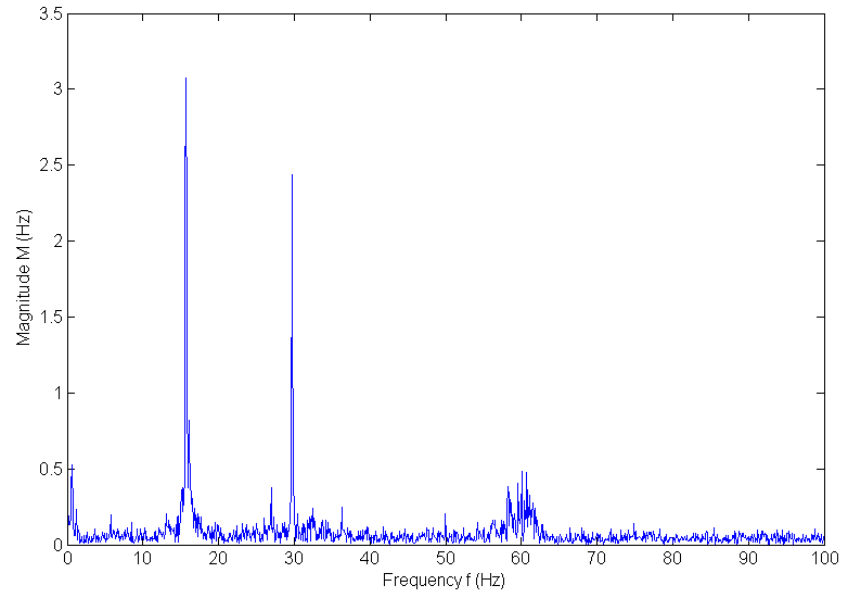


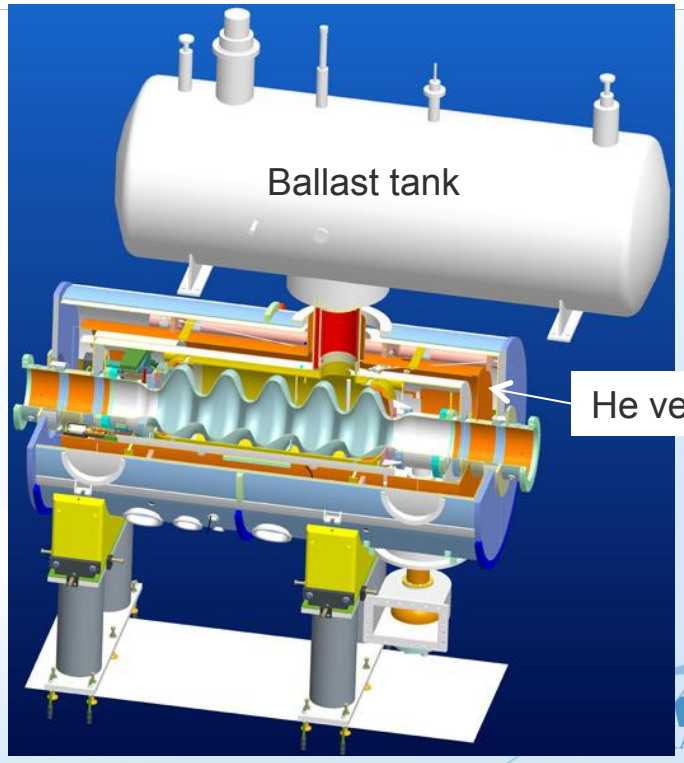

# BNL1 status

- HOM measurements have been carried out at 4 K and 2 K and match well with simulations.
- 50 kW transmitter working well, both CW and pulsed.
- New digital LLRF system was commissioned recently.
- Work continues to develop piezo-tuner feedback for microphonics suppression.
- The dedicated refrigerator will be commissioned in December.

# Summary

- eRHIC will have three ERLs operating at 704 MHz and employing elliptical 5-cell SRF cavities (BNL3).
- Energy loss compensation SRF linac will use 2-cell second harmonic SRF cavities.
- BNL3 cavity RF design is complete. A copper prototype has been fabricated by AES and will be used to study HOM dumping. Fabrication of the niobium prototype will begin soon.
- Design of the cryounit and auxiliary components is starting.
- 5-cell BNL1 cavity is installed in the R&D ERL block house, was tested several times and is ready for beam.
- CW operation will be limited to 12 MV/m due to thermal problem.
- A quasi-CW operation will be used at higher gradients.
- Studies of microphonics and piezo-tuner based feedback are under way.