LHC LUMINOSITY MONITOR

A. Ratti
LBNL

A. Drees
BNL

Brookhaven
10 Nov. 2005

Outline

- Device description
  - Conceptual design
  - Subsystems details
- Rationale for a test in RHIC
- Description of the experiment
- Our request

LARP Instrumentation Systems

LARP Instrumentation will deliver unique capabilities that will greatly enhance the LHC and facilitate both commissioning and performance optimization

- Luminosity Monitors
  - Bunch-by-bunch measurement of luminosity
- Tune Feedback and Coupling measurements
  - Tune measurement and PLL feedback
- Schottky Monitors
  - Non invasive bunch-by-bunch tune (+ Chromaticity)

LUMI - Requirements

Requirements (Lumi mini Workshop, 16-17 Apr. 99)

- Absolute L measurement with $\delta L/L \sim 5\%$ for $L > 10^{30}$ $cm^{-2}sec^{-1}$
- Cross calibration with LHC experiment measurements of L (every few months)
- Sensitivity of L measurement to variations of IP position ($x^*, y^* < 1mm$) and crossing angle ($x^{*\prime}, y^{*\prime} < 10\mu rad$) less than 1%
- Dynamic range with "reasonable" acquisition times for 1% precision to cover $10^{28} cm^{-2}$ sec^{-1} to $10^{34} cm^{-2}$ sec^{-1}
- Capable of use to keep machine tuned within ~ 2% of optimum L
- Bandwidth 40 MHz to resolve the luminosity of individual bunches
- Backgrounds less than 10% of the L signal and correctable

LBNL
25 Jan. 2002

40 MHz Ionization Chamber
W.C. Turner

11

Help bring beams into collisions too

LUMI - Conceptual Design
Argon Ionization Chamber

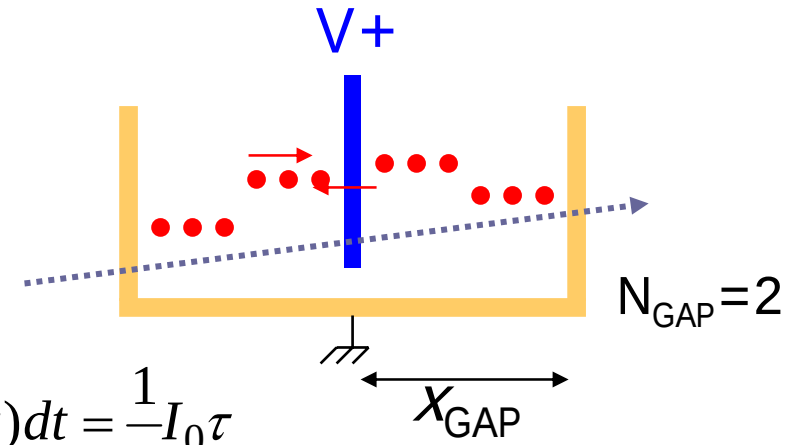

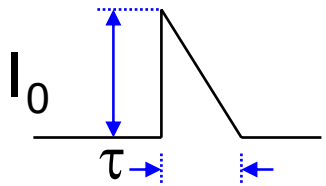

$$\tau = x_{GAP}/v_D \quad Q = \int_0^{\tau} I(t)dt = \frac{1}{2} I_0 \tau$$

Signal is proportional to the number of parallel gaps
Capacitance add up with n. of gaps + slows down the signal

→Optimized for 6 gaps
→Must live in a radiation environment 100 x worse than accelerator instruments have ever seen

Bunch-by-bunch Luminosity

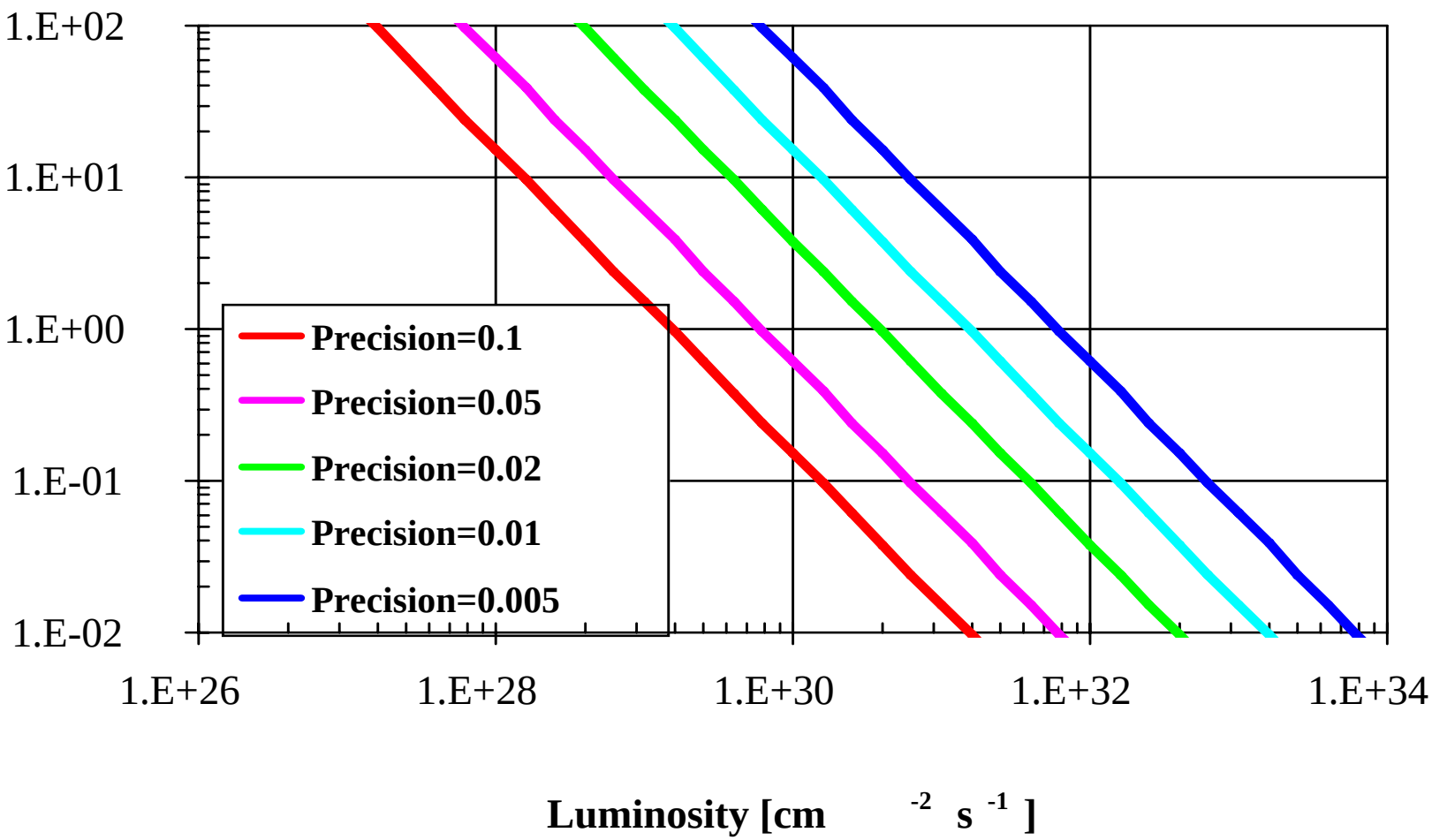

m=0.33 σ_{INEL}=80 mb SNR=5 2808 bunches

Ion Chamber Main Parameters

Table 1: Ionization chamber details

Quadrant area,mm2	1600
Gap between plates,mm	1.0
No. of gaps in parallel	6
Gas	Ar+6%N
Gas pressure,atmos abs	6
Ioniz pairs/mip-mm	58.32
E/p, V/mm-atm	200
Gap voltage, V	1200
Electron drift velocity,mm/microsec	45.0
Amplifier/Shaper gain, microV/e-	0.16
rms noise,mV	1.24

Example shown (6 atm) is that of the proposed RHIC experiment

W. Turner - LBL-CBP TN 352, Oct. 2005

Case design & fabrication

Stainless steel CNC milled construction

- Stainless steel allows extra thin wall to optimize detector size
- Permits welded-in isolated-ground coax feedthroughs
- Gas is directed across sensor by channel milled in case half

No-weld, bolt-together design with sheet tin gasket

- Disassembly before installation possible for engineering updates, QA issues
- No heating of components when final weld-up is performed
- Uniformity between prototype and production units

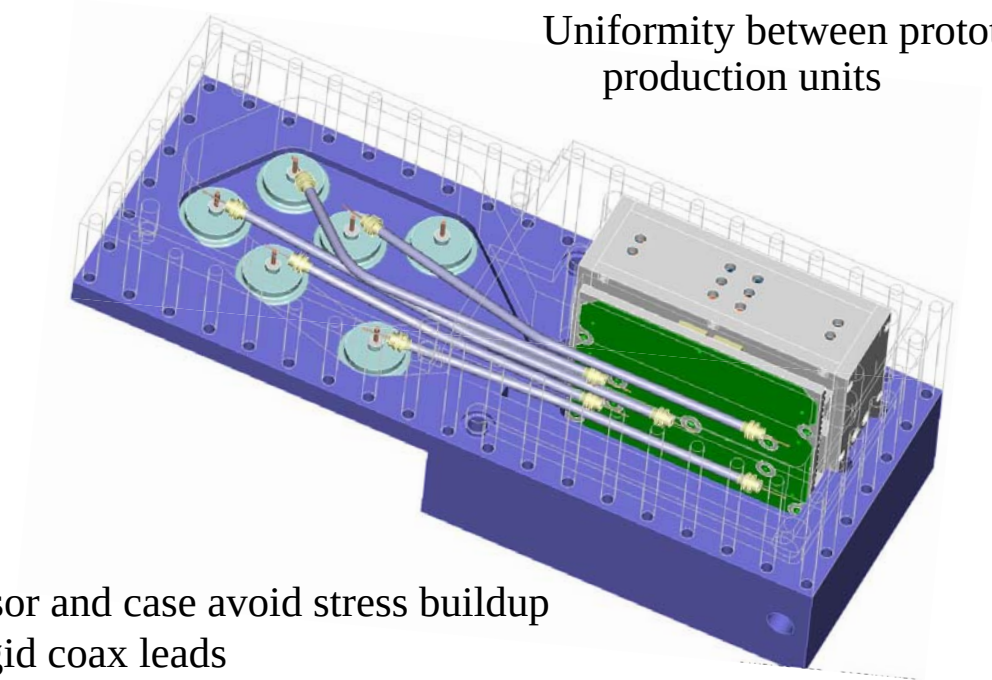

Sensor mounting

- Fits milled pocket in case
- Wave washers between sensor and case avoid stress buildup on MACOR case and rigid coax leads

Readout Electronics

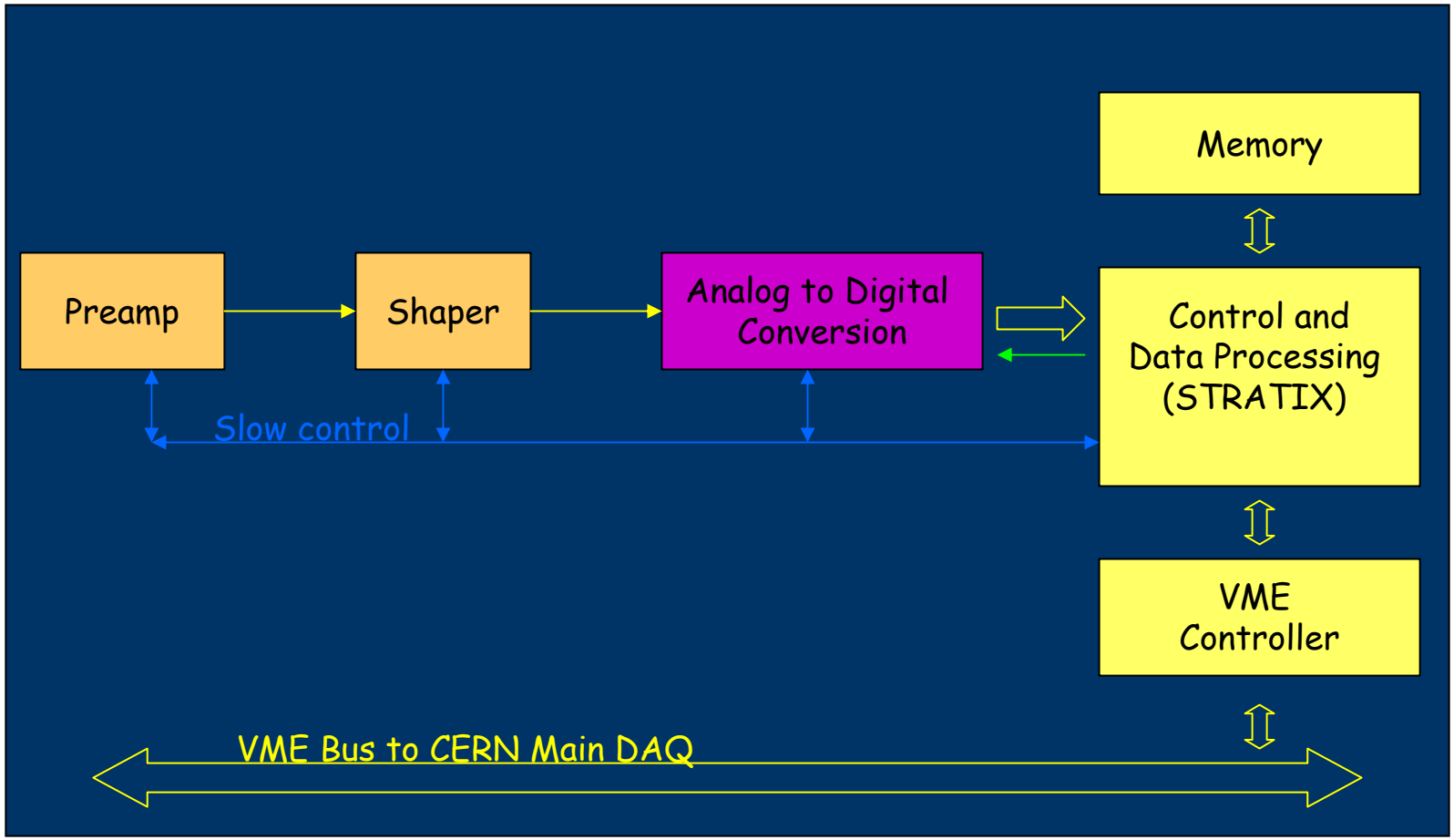

Readout Electronics - Approach

- Active termination front end to properly compensate the chamber capacitance
  - Initial design in collaboration with Univ. di Pavia, INFN, Italy
- Pulse shaping electronics necessary to limit the noise bandwidth.
- Pulse shaping is also necessary to reduce the width of the pulse to accommodate the 40MHz repetition rate.
- Baseline recovery (Pole-Zero cancellation)
- Shaped pulse is digitized in a mezzanine board designed for the DABIV VME64 card used as standard interface by CERN - BI
- FPGA programming by LBL, controls programming by CERN

LUMI Front-End Amplifiers: Cold Termination – Pavia Amplifier

Original Design developed by P.F. Manfredi, L. Ratti and G.Traversi of the University of Pavia using a cold termination technique:

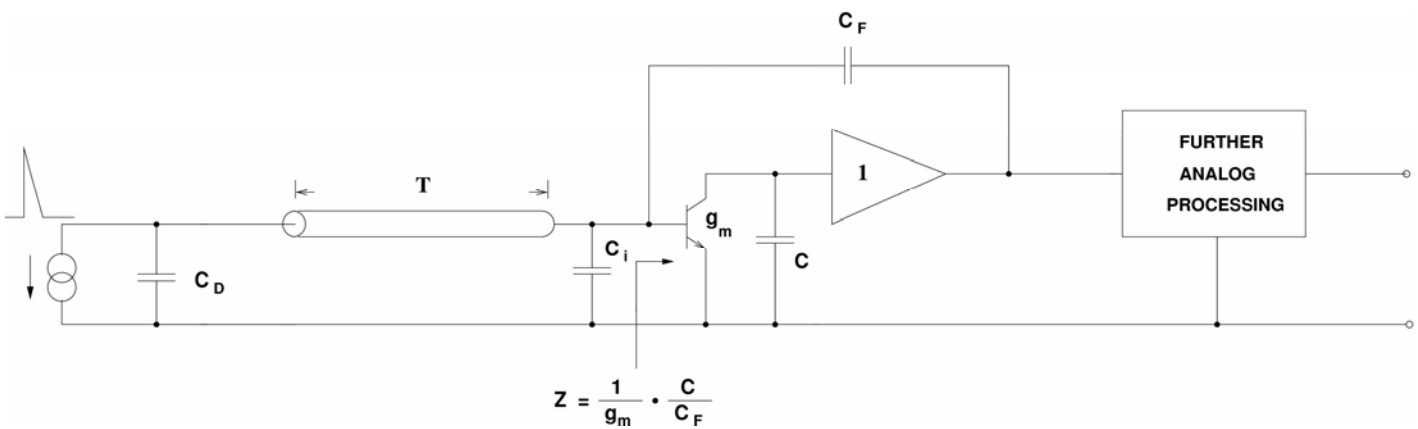

E. Gatti, P.F. Manfredi, IEEE Trans. Nucl. Sci, vol. NS 25, 1978, pages 66-74

SK4: 40MHz Burst Response (simulated)

Preamplifier Model

SK4 Response With PZ adjusted

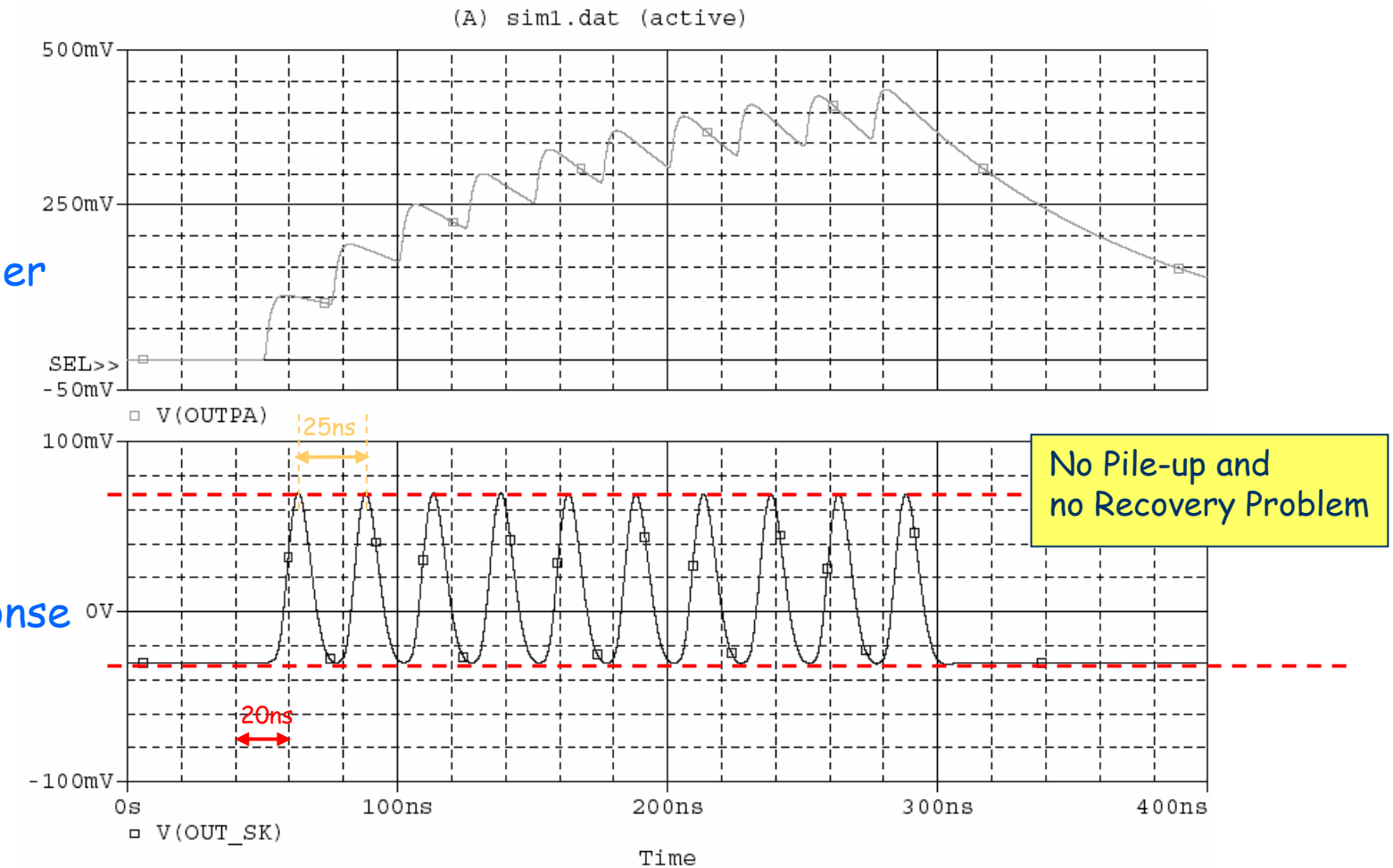

Data Acquisition Board Features (J.L. Gonzales, CERN)

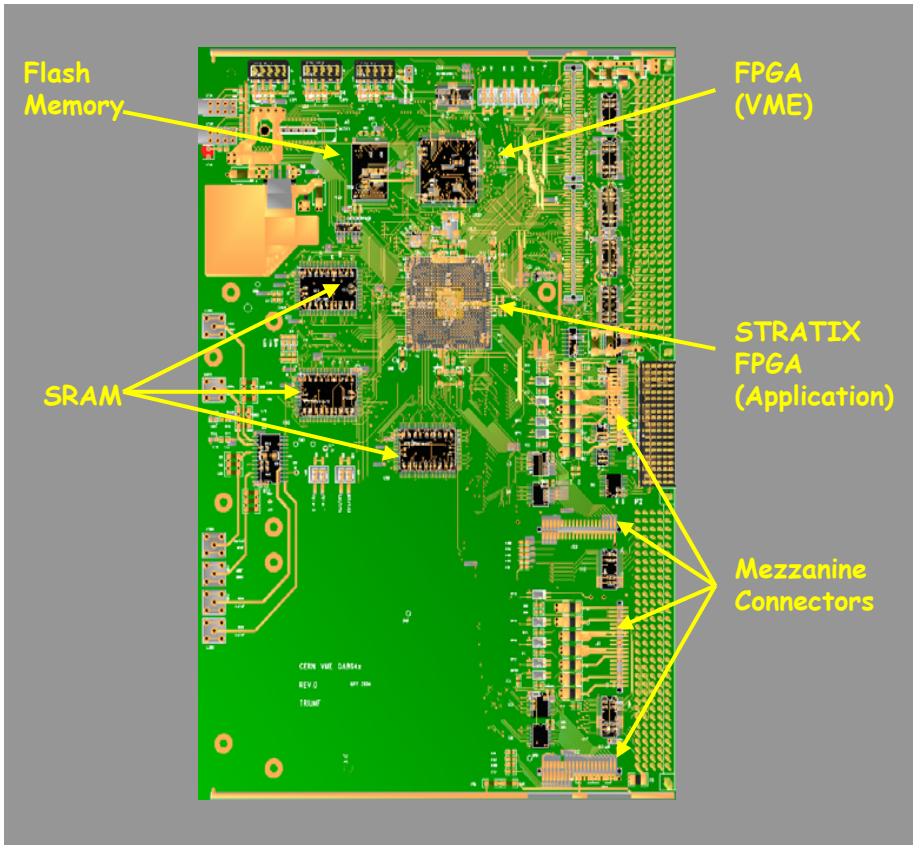

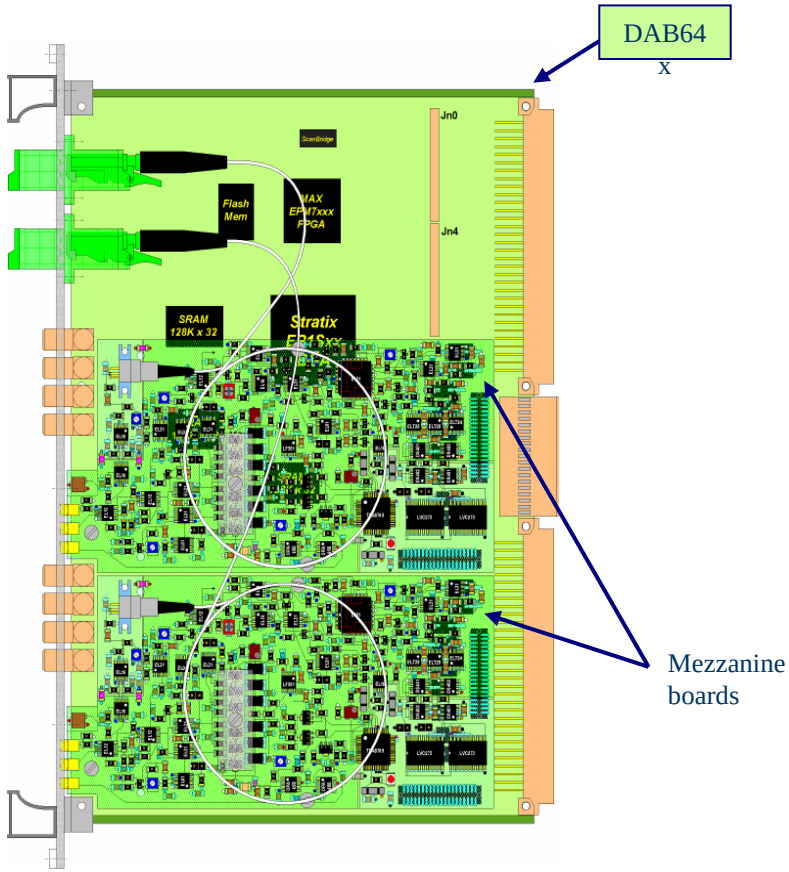

LUMI - Installation Concept

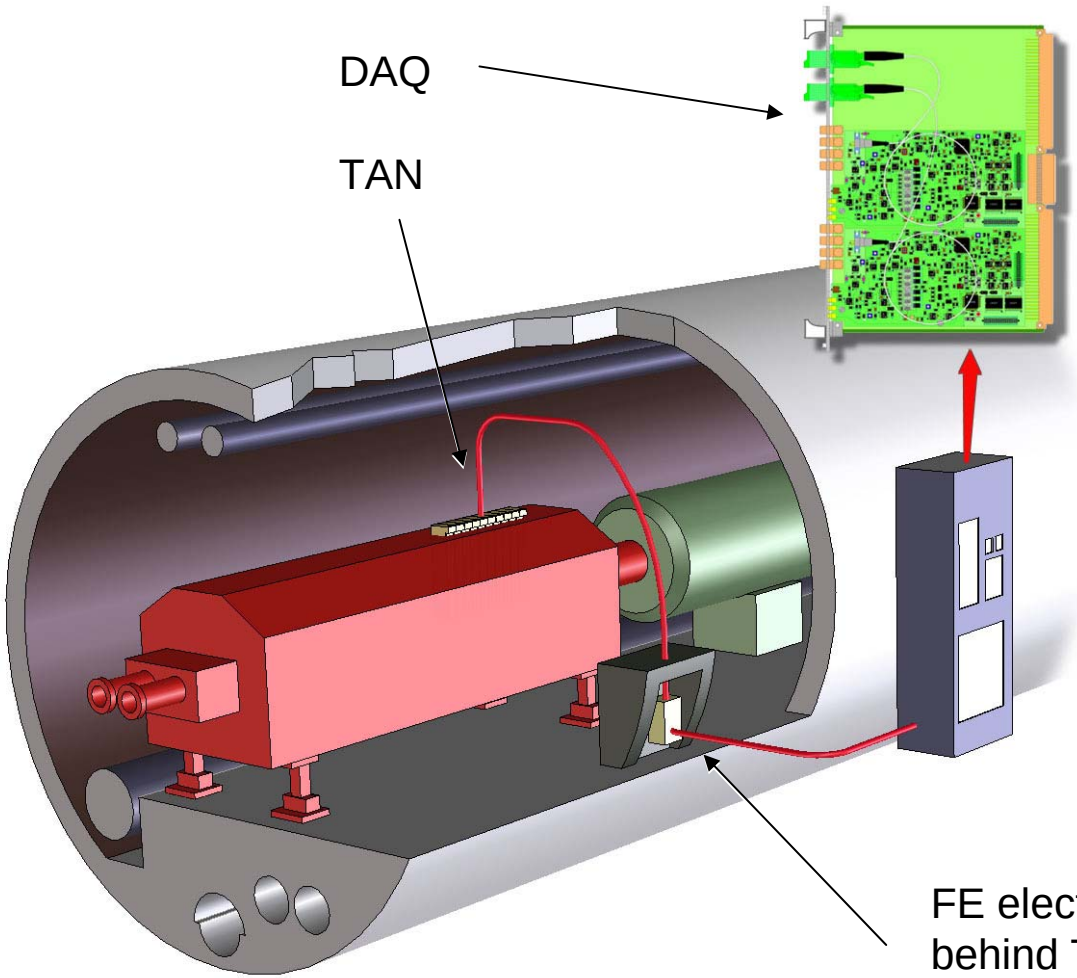

FE electronics located behind TAN

(shown here for illustration purposes)

GROUNDING SCHEME "STAR" CONNECTION

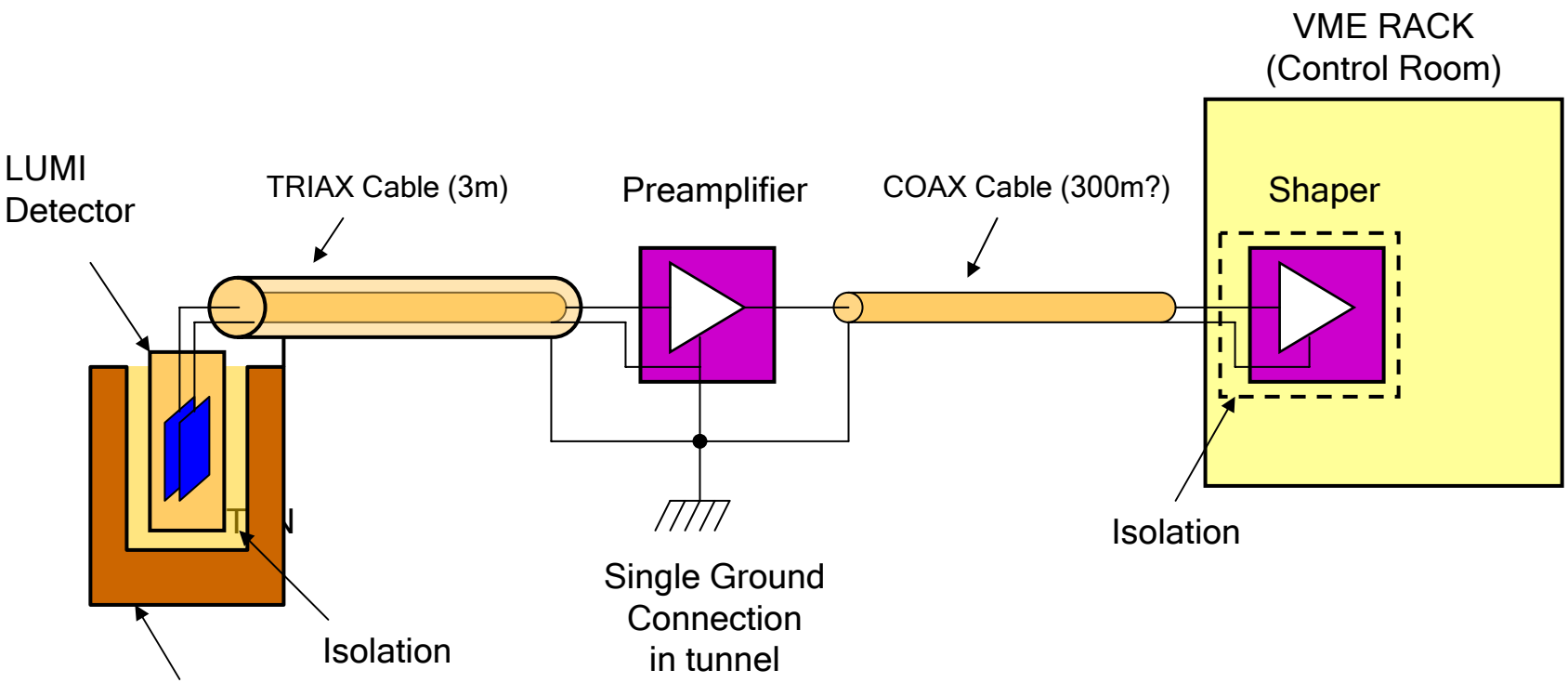

LUMI - Detector Assembly

QuickTime™ and a
Cinepak decompressor
are needed to see this picture.

LUMI - Status

- Activity started as early as 1997
  - initially part of LHC construction project
- Participated in 40 MHz runs at CERN in 2000 and 2001
- Present approach and chamber design developed in 2003
- Beam tested at ALS booster transfer line at 1 Hz
  - Validated all system modeling
  - Fully tested integration with FE electronics
- Successful 40 MHz test with hard X-rays at ALS beamline
- Seek validation in hadron collider

Plans for a test in RHIC

- Install in 10 o'clock region
  - Now empty, Phobos was removed
- Goals
  - Become familiar with operation in a hadron collider environment
  - Benchmark device against the proven RHIC ZDC luminosity monitors
  - Investigate some sources of background
  - Develop signal processing implementation
  - **Integrate readout with ZDC**
- Multiple reasons to prefer Au-Au collisions
  - More neutron yield
  - Better neutron energy
  - Dedicated collisions have less effect on lifetime than in p-p mode
    - Beam-beam stronger in p-p
  - Event by event correlation may be possible in p-p
- More challenging test with protons
  - Feasible with more amplification
  - Useful integration exercise
  - Get real collider data

RHIC Experiment Setup

Table 3: Collider parameters	LHC(p-p)	LHC(p-p)	RHIC(p-p)	RHIC(Au-Au) All events	RHIC(Au-Au) Inelastic events
Luminosity, cm-2sec-1	1.0E+34	1.0E+32	1.0E+31	2.00E+26	2.00E+26
Beam energy, TeV	7.0	7.0	0.1	19.7	19.7
Filled bunches	2808	2808	116	116	116
Lumi/bunch pair, cm-2sec-1	3.6E+30	3.6E+28	8.6E+28	1.7E+24	1.7E+24
No. bunch spaces	3564	3564	116	116	116
Bunch separation, nsec	25	25	110	110	110
Rev freq, kHz	11.2455	11.2455	78.2	78.2	78.2
Inelastic + Coul diss xsection, mb	80	80	44	57000	7000
Interactions/bunch xing	25.3	0.25	4.9E-02	1.3E-03	1.5E-04
Effective neutron multiplicity/int	0.5	0.5	5.5E-02	3.2E+00	15
Effective neutron prod xsection, mb	40.0	40.0	2.4	180000	105000
Neutrons/bunch xing	12.7	0.13	2.6E-03	4.0E-03	2.3E-03
Mean neutron energy, TeV	1.5	1.5	0.03	0.1	0.1
Mean mips/bunch xing(1 quad)	6.8E+03	6.8E+01	2.8E-02	1.4E-01	8.3E-02
No ioniz e-/bunch xing	2.4E+06	2.4E+04	9.9E+00	5.0E+01	2.9E+01
Mean pulse height/bunch xing, mV	**3.8E+02**	**3.8E+00**	**1.6E-03**	**7.9E-03**	**4.6E-03**
Mean mips/neutron	5.4E+02	5.4E+02	1.1E+01	3.6E+01	3.6E+01
Flux ioniz e-/neutron	1.9E+05	1.9E+05	3.7E+03	1.2E+04	1.2E+04
Mean pulse height/neutron,mV	3.0E+01	3.0E+01	6.0E-01	2.0E+00	2.0E+00
Interactions/sec	8.0E+08	8.0E+06	4.4E+05	1.1E+04	1.40E+03
Det eff	3.5E-01	3.5E-01	4.7E-02	7.2E-01	1.0E+00
Events/sec	2.8E+08	2.8E+06	2.0E+04	8.2E+03	1.4E+03
Events/bunch xing	8.9E+00	8.9E-02	2.3E-03	9.0E-04	1.5E-04
Mean energy/neutron, TeV	1.5	1.5	0.03	0.1	0.1
Neutron mult/det event	1	1	1	3.2	15
Mean energy/event, TeV	1.5	1.5	0.03	0.32	1.5
Mean mips/event	7.7E+02	7.7E+02	1.3E+01	1.6E+02	5.4E+02
No ioniz electrons/event	2.7E+05	2.7E+05	4.4E+03	5.5E+04	1.9E+05
Mean pulse height/event, mV	**4.3E+01**	**4.3E+01**	**7.0E-01**	**8.8E+00**	**3.0E+01**

LUMI Integration at RHIC

- LBNL will deliver
  - Prototype chamber with front end electronics and shaper
  - Gas control system
  - DAQ with programming
    - Initially just scopes
  - Experimental support and hardware commissioning

- BNL should provide
  - Local installation
  - Gas supply and distribution
  - HV and DC power supplies
  - Control system integration (if needed
  - Beam synch clock

LARP is providing funds for BNL's effort and materials

Experiment Proposal

- Ask for 2 times 4 hours collisions at IR10
  - IP 10 only
  - Some time between two sessions
  - Highest bunch current and n. of bunches
  - Highest possible luminosity-> low β??

- Prefer Au collisions

- Semi-parasitic mode
  - During physics run, provide collisions in IR10 for few hours
  - Spoils luminosity lifetime, but not as expensive as a dedicated experiment

- Fully parasitic mode
  - Still look at backgrounds anytime
  - Not worth installing for just this test

- Bunch by bunch capability in RHIC?