Active Damping tests for a possible cure of the 10 Hz problem

Peter Thieberger
Wolfram Fischer
Christoph Montag
Todd Satogata
Dejan Trbojevic
Roger Bonati
Carl Schultheiss
RF support

APEX Workshop, Dec. 5, 2008

Proof of principle tests at Magnet Division

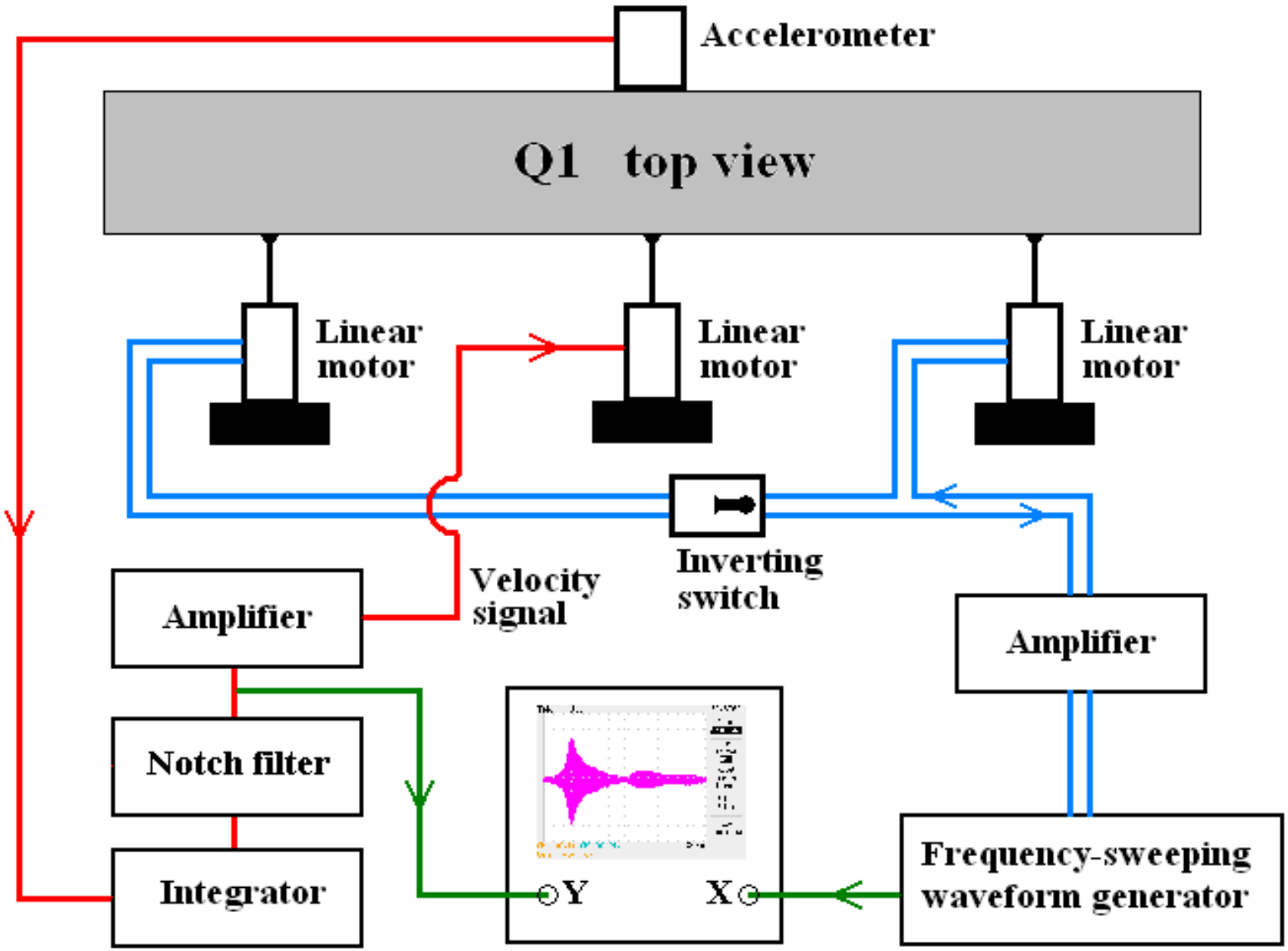

Q1 Setup

Results when Damping One End

ROLLING Excitation

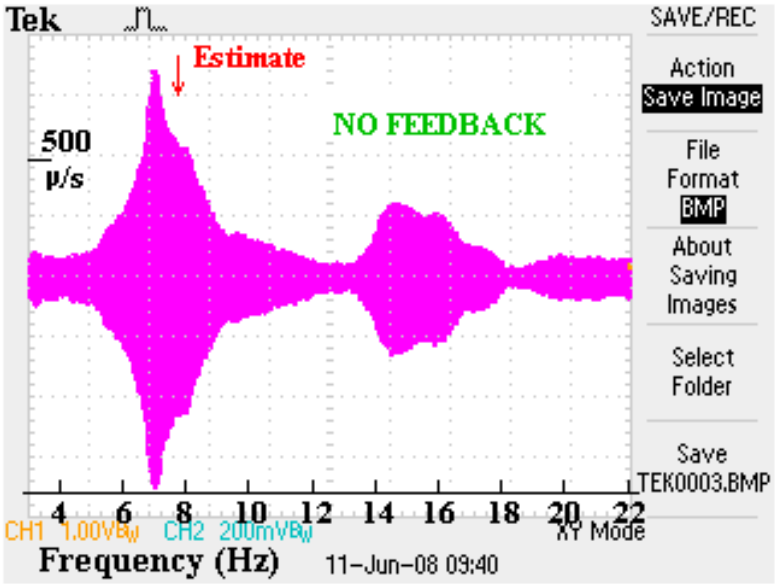

YAWING Excitation

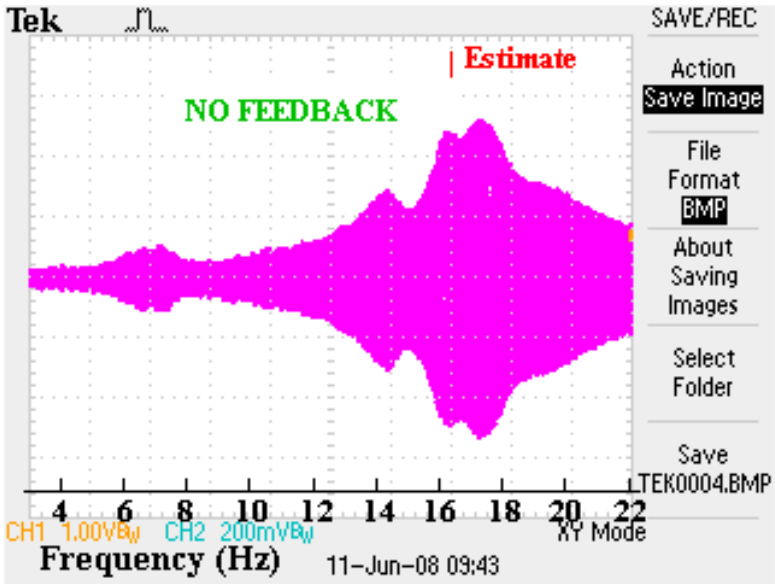

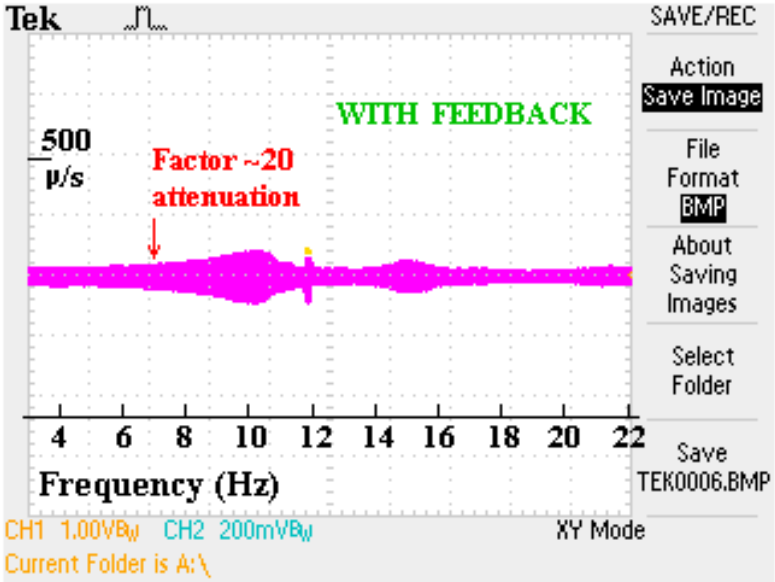

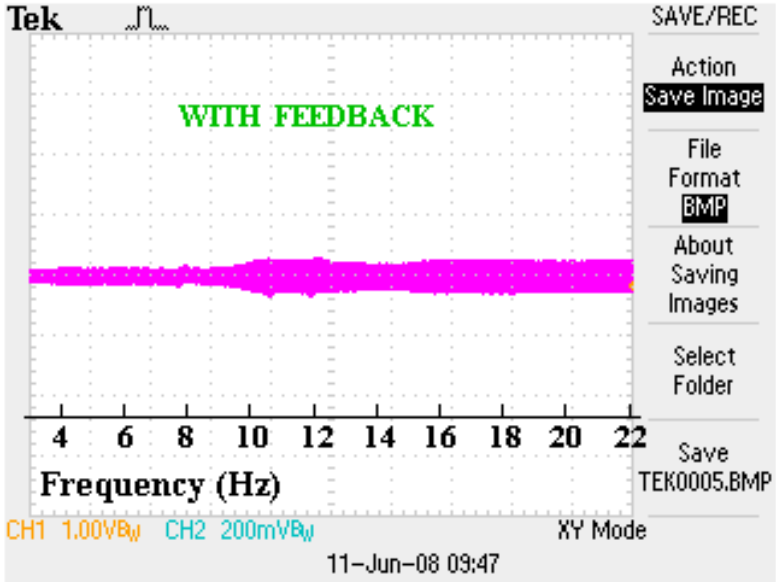

ACTIVE DAMPING MODEL

Equivalent circuits for a Geophone + a simplified magnet represented by a damped driven harmonic oscillator, both coupled to a compensating feedback generating circuit.

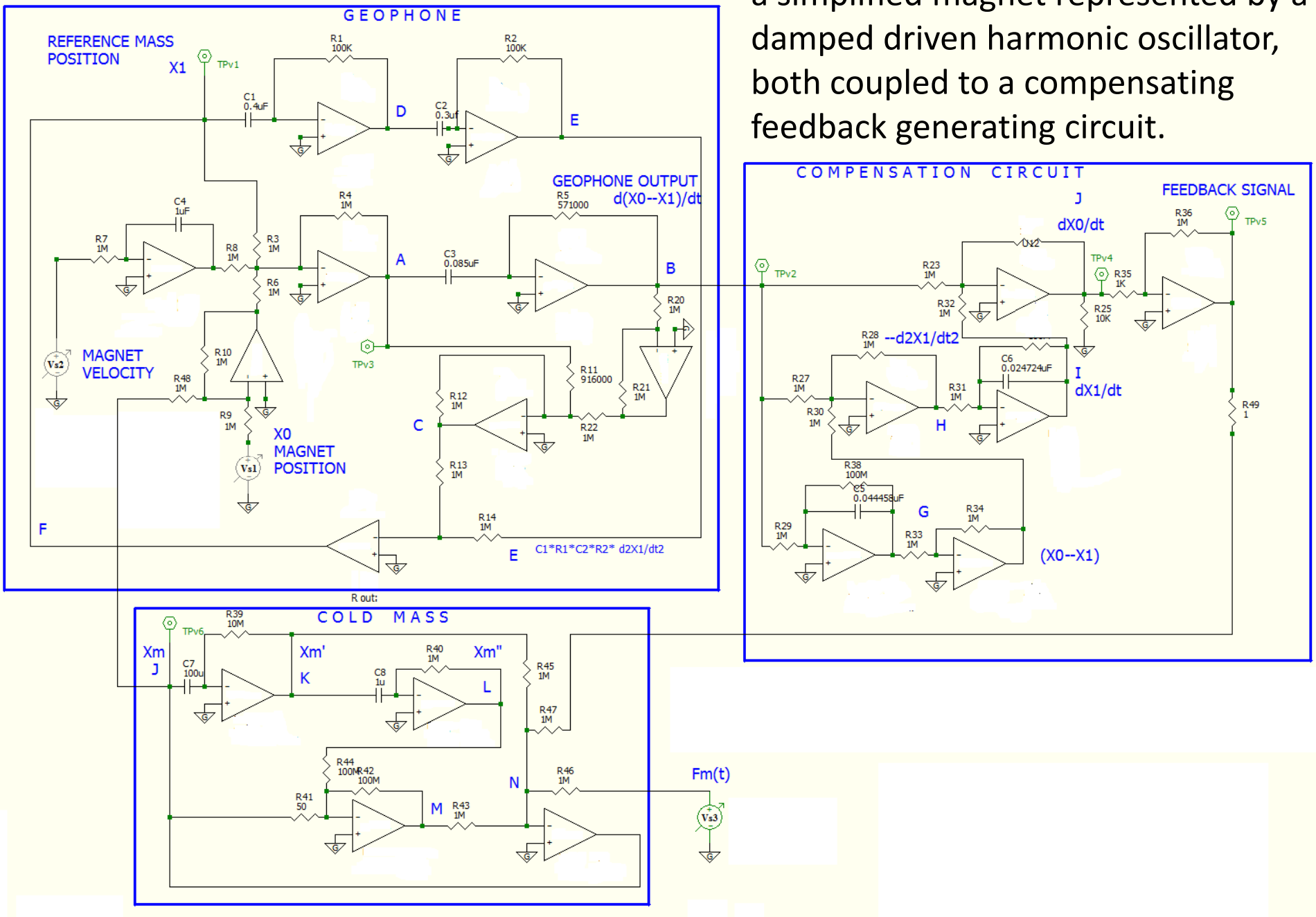

Simulated transient response to a 1 Newton step

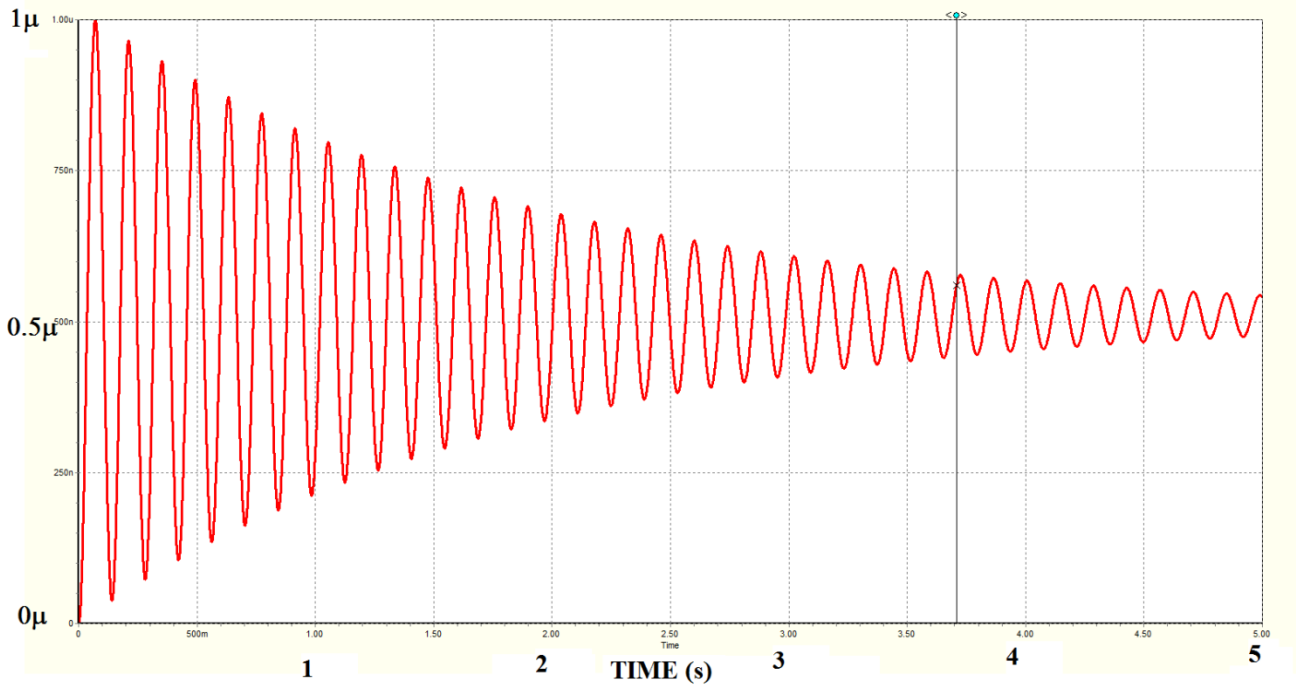

NO DAMPING

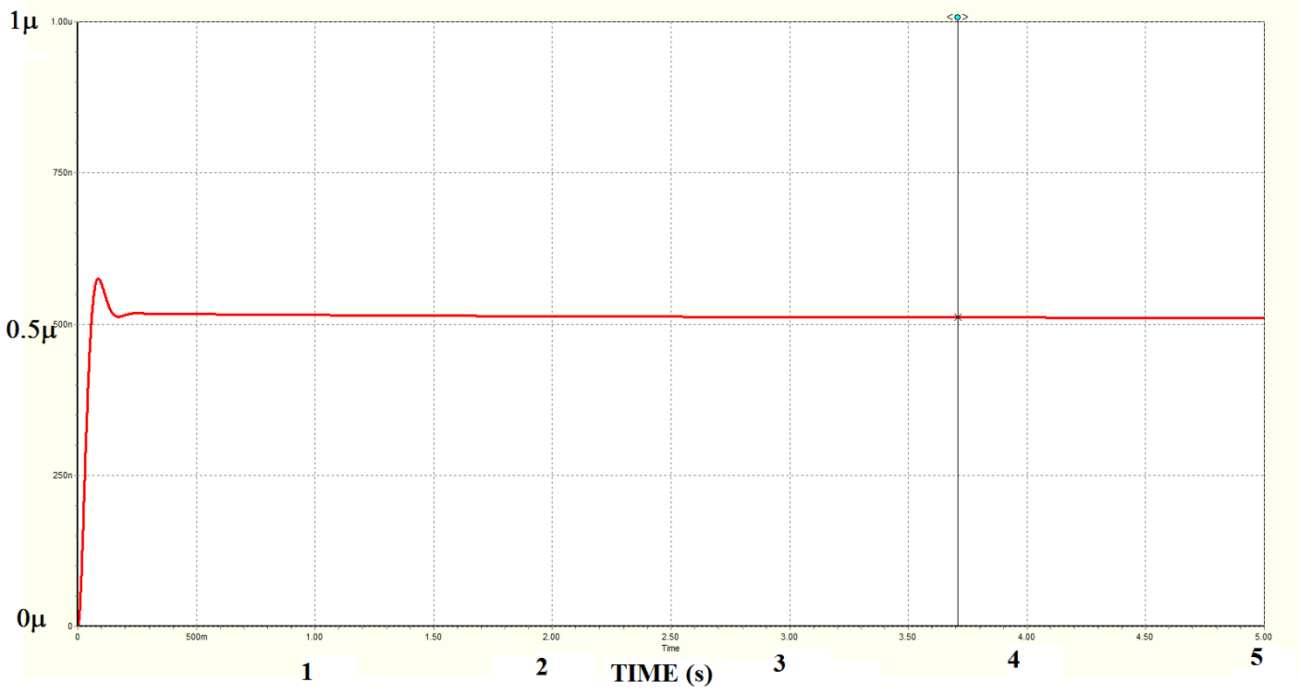

WITH DAMPING

SIMULATED MAGNET RESPONSE

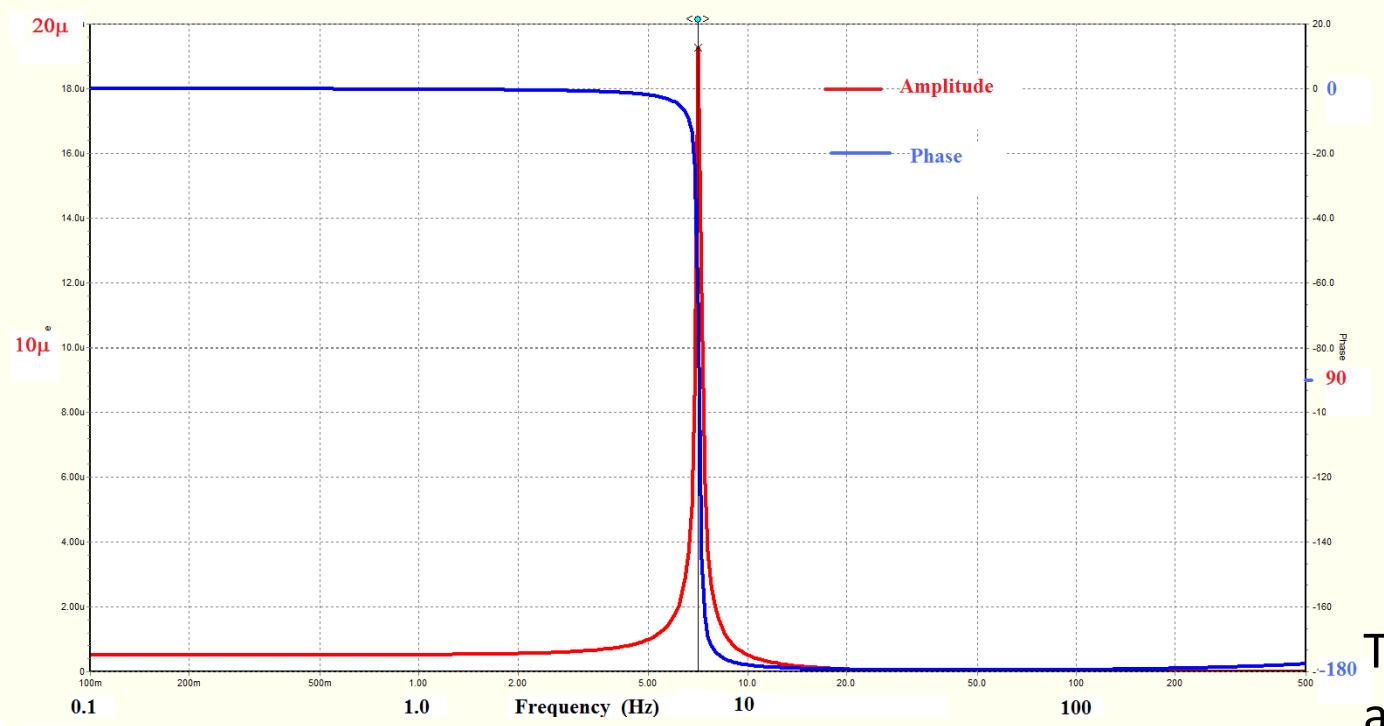

NO FEEDBACK

Transfer functions for a 1 Newton amplitude sinusoidal force

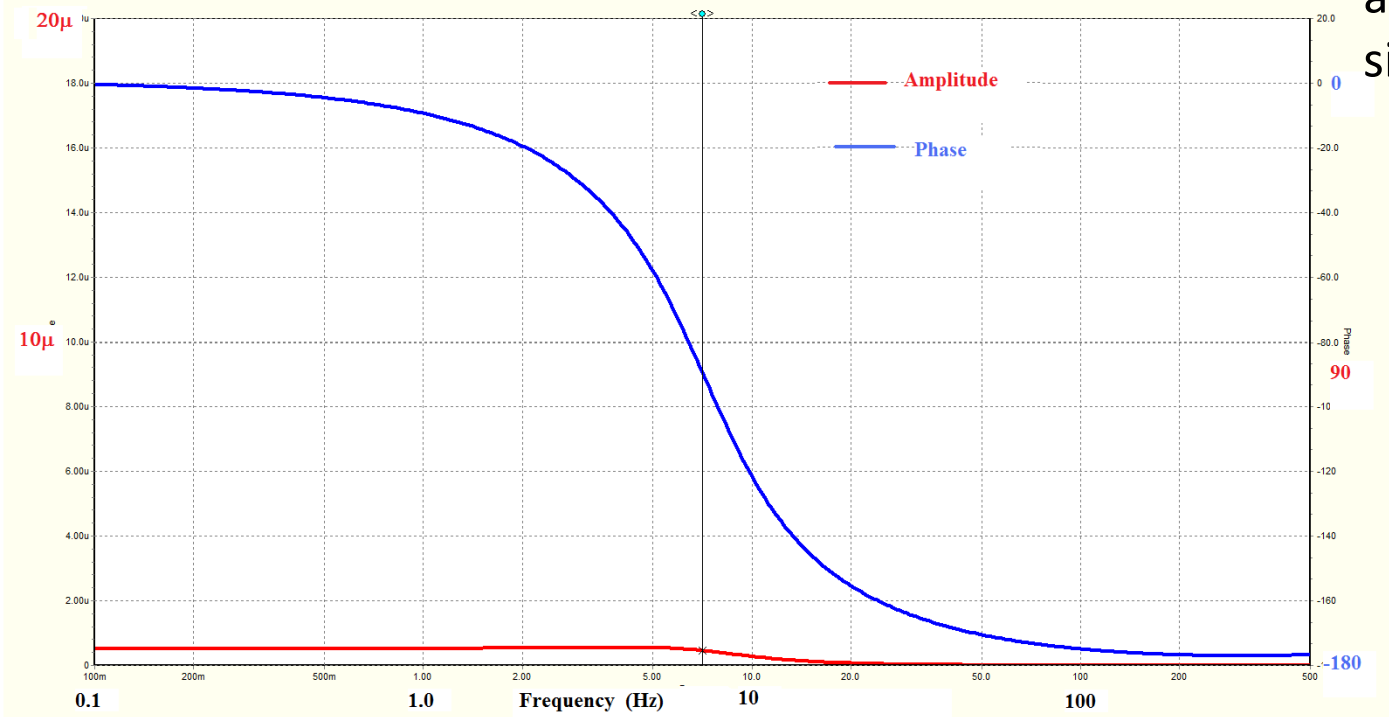

WITH FEEDBACK

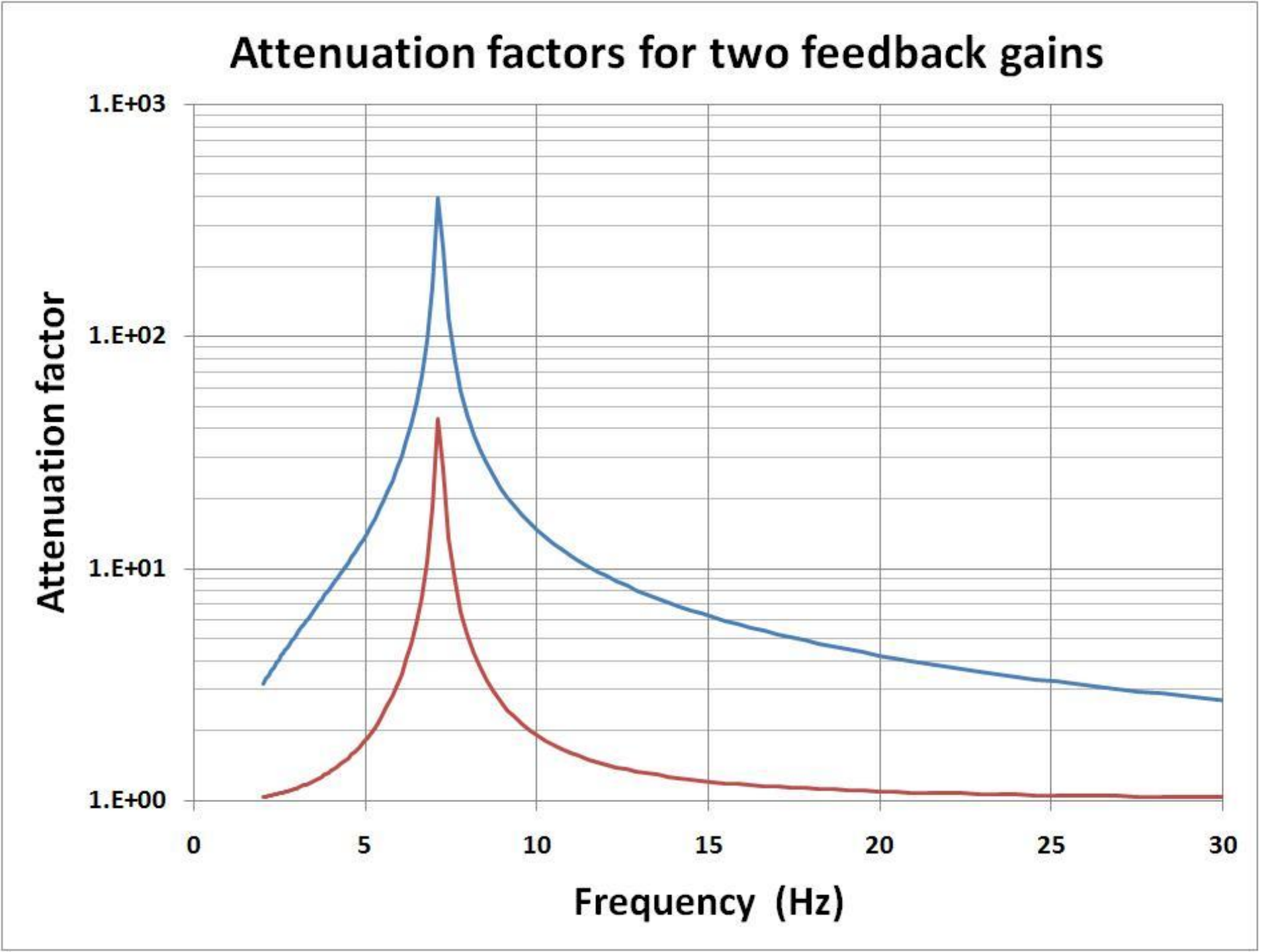
Attenuation factors for two feedback gains
1.E+03
1.E+02
1.E+01
1.E+00
Attenuation factor
0
5
10
15
20
25
30
Frequency (Hz)

10 Hz tests and measurements planned for 2009

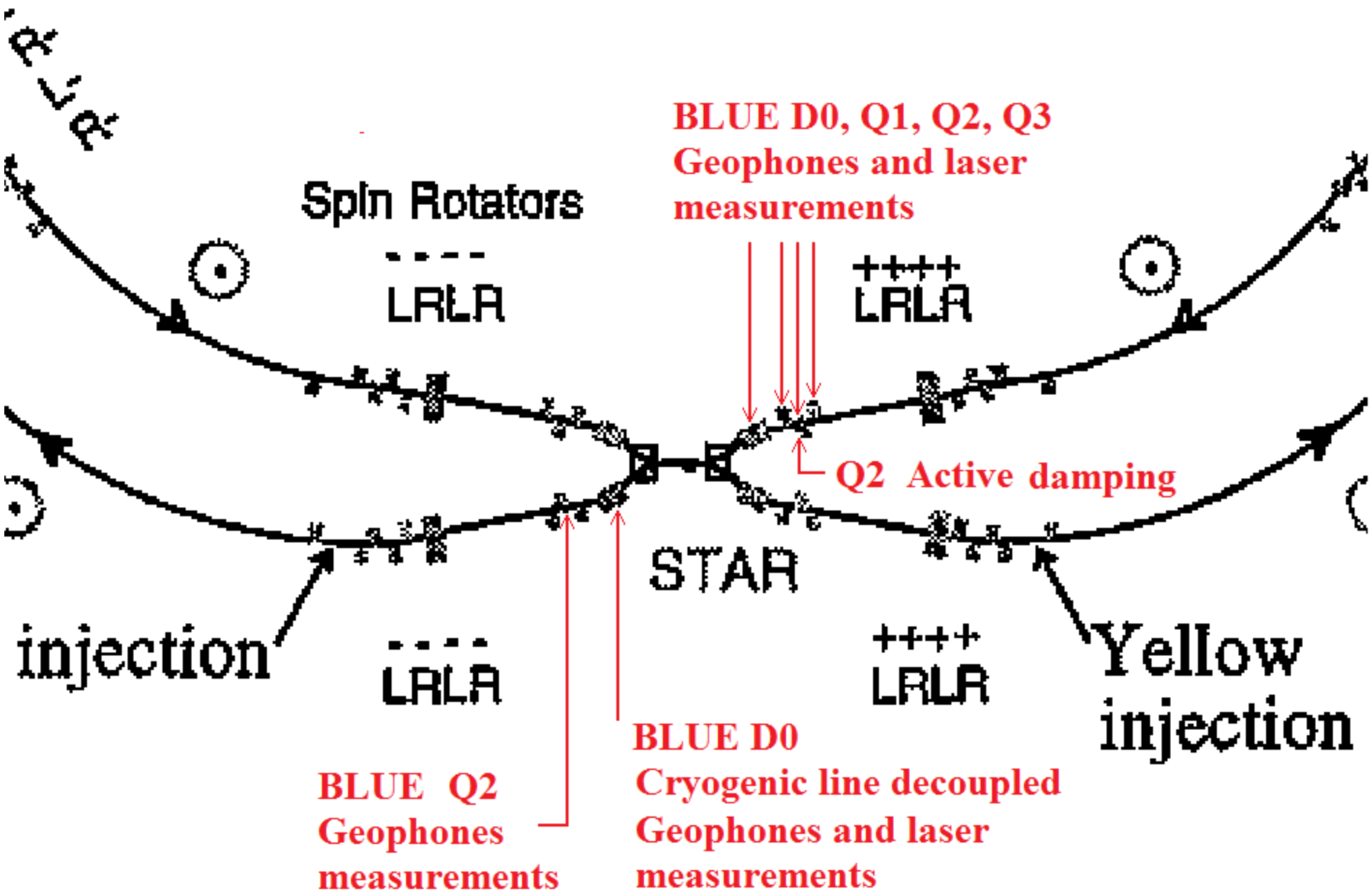

Preliminary look at geophone signals

Magnet	Main frequency component (Hz)		Approximate peak to peak amplitude (μm)	
	Horizontal	Vertical	Horizontal	Vertical
5 D0	8	22	0.53	0.21
5 D0	6	22	0.56	0.21
6 D0	6	20	0.56	0.15
6 D0	8	22	1.05	0.14
6 Q1	9	25	1.00	0.12
6 Q1	9	24	1.00	0.13
6 Q2	5		1.14	
6 Q2	5		1.14	
6 Q3	5	20	1.14	0.08
6 Q3	10	22	0.95	0.07

Conclusions from the first (warm) measurements

- All geophones are working
- The horizontal RMS amplitudes are ~0.2 to 0.4μm .
- The horizontal frequencies (~5 to 10 Hz) are roughly as expected.
- There are vertical motions (~20 to 25 Hz) with RMS amplitudes from ~0.03 to 0.1 μm .
- Much more accurate warm and cold measurements will be performed.

Linear actuators, external geophones and measurement ports to be installed at blue Q2 in sector 6

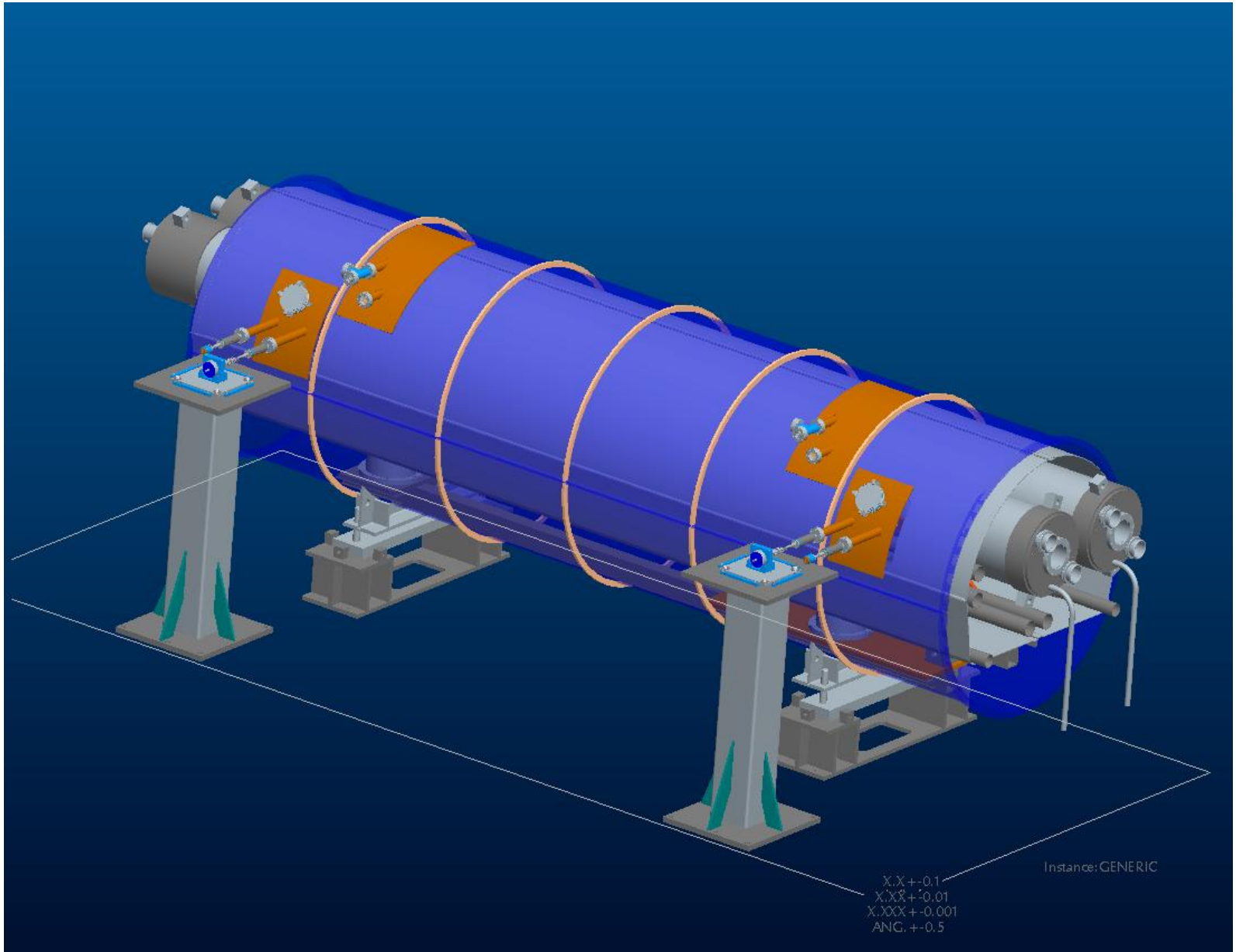

Linear actuator, external geophone and measurement ports to be installed at blue Q2 in sector 6

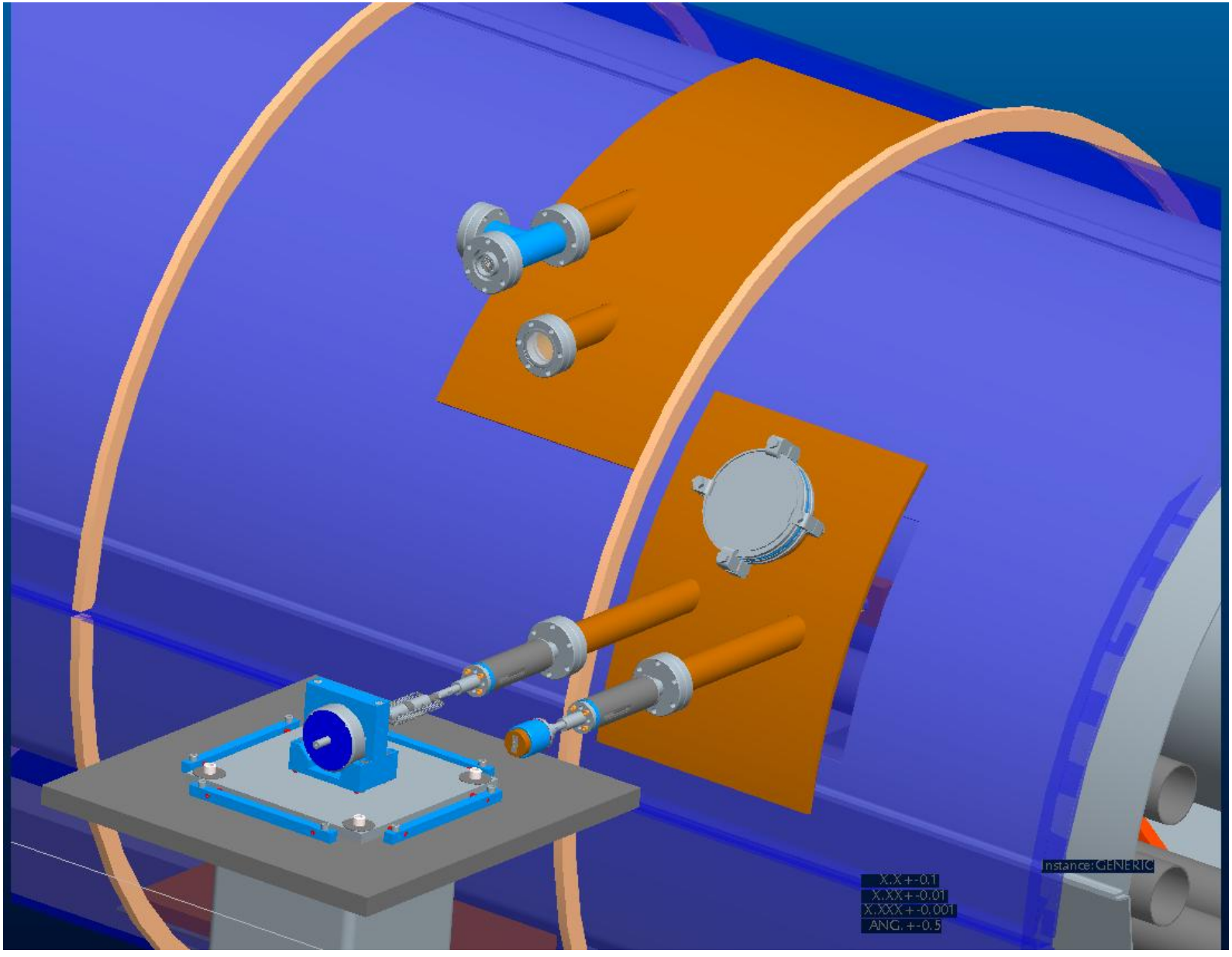

Devices to be installed in the sector 5 blue Q2 for the measurement and attenuation of cold mass vibrations

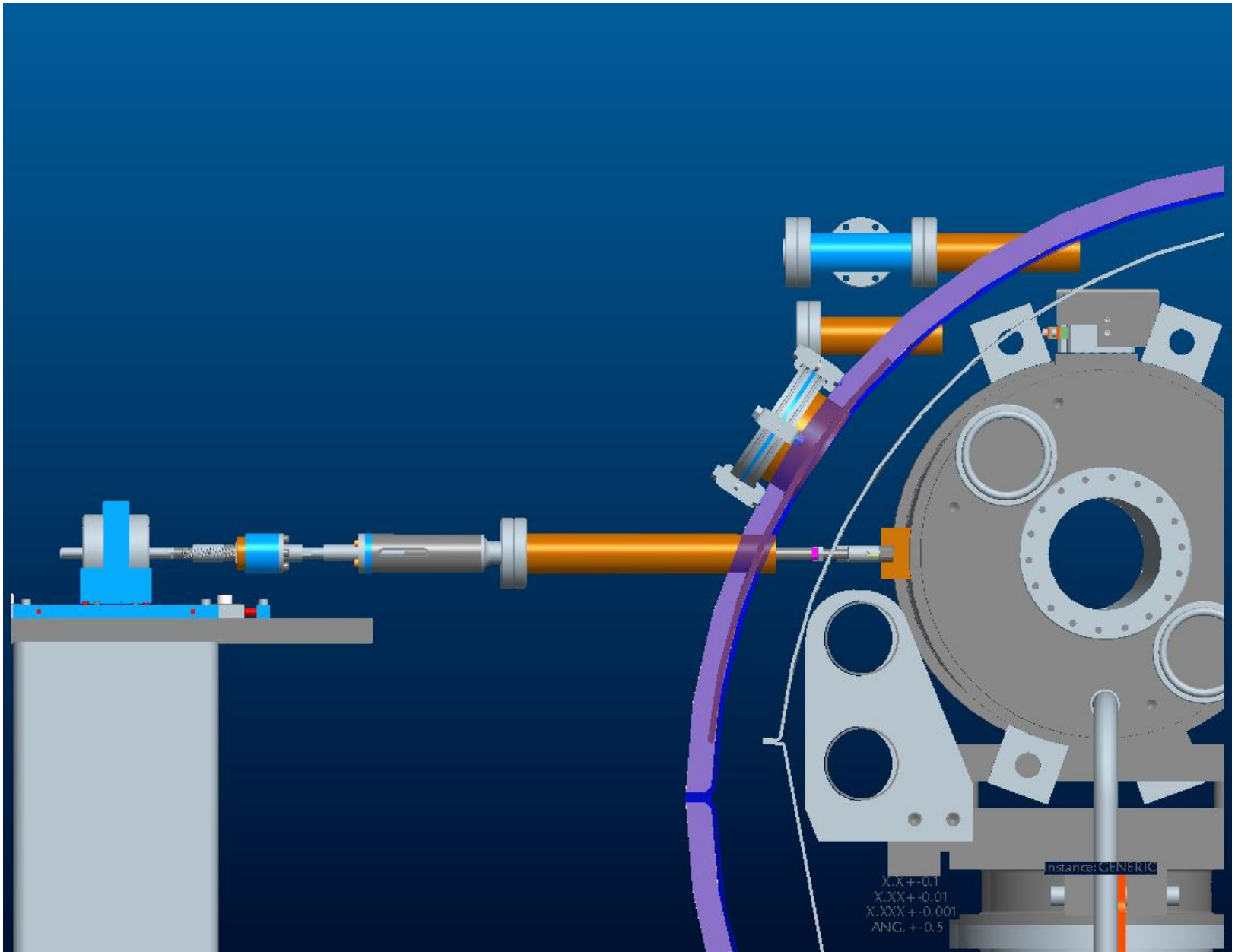

Planned measurements with beam
(Only the blue Q2 in sector 6 will be available)

1. Measure detailed correlations between the magnet motion and orbit displacements.
2. Study the feedback effectiveness for suppressing the orbit motions due to that magnet.
3. Study the results of applying forces to both ends of the the cold mass to vary the vibration amplitude, frequency and relative phase.
4. 1. and 2. may be parasitic, but 3. will probably require two 1-hour periods of dedicated time.