Transition Chromaticity Monitor, Feedback and Other Studies

Peter Cameron

APEX Workshop
Nov 2007

Outline

- Transition Chromaticity Monitor
- ‘Hybrid’ tune tracker?
- Chromaticity measurement and feedback
- Other Stuff
  - Beam transfer functions
  - Streaming audio
  - Coupling echoes?

To calculate chrom from measured 3dB linewidths

$$width_{upper} = 2 \cdot \sqrt{\ln 2} \cdot \frac{\delta p}{p} \cdot f_{rev} \cdot ((h - Q) \cdot \eta - Q') + octupole \qquad (1a)$$

$$width_{lower} = 2 \cdot \sqrt{\ln 2} \cdot \frac{\delta p}{p} \cdot f_{rev} \cdot ((h + Q) \cdot \eta + Q') + octupole \qquad (1b)$$

Solve eqns (1) for Q', add the resulting 2 eqns together to get

$$Q' = \frac{\left|width_{lower}\right| - \left|width_{upper}\right|}{4 \cdot \sqrt{\ln 2} \cdot \frac{\delta p}{p} \cdot f_{rev}} - Q \cdot \eta \qquad (2)$$

Span is ~3 sec before γ_t to ~1 sec after

Case 3: quad jump, +4 chromaticity jump at transition

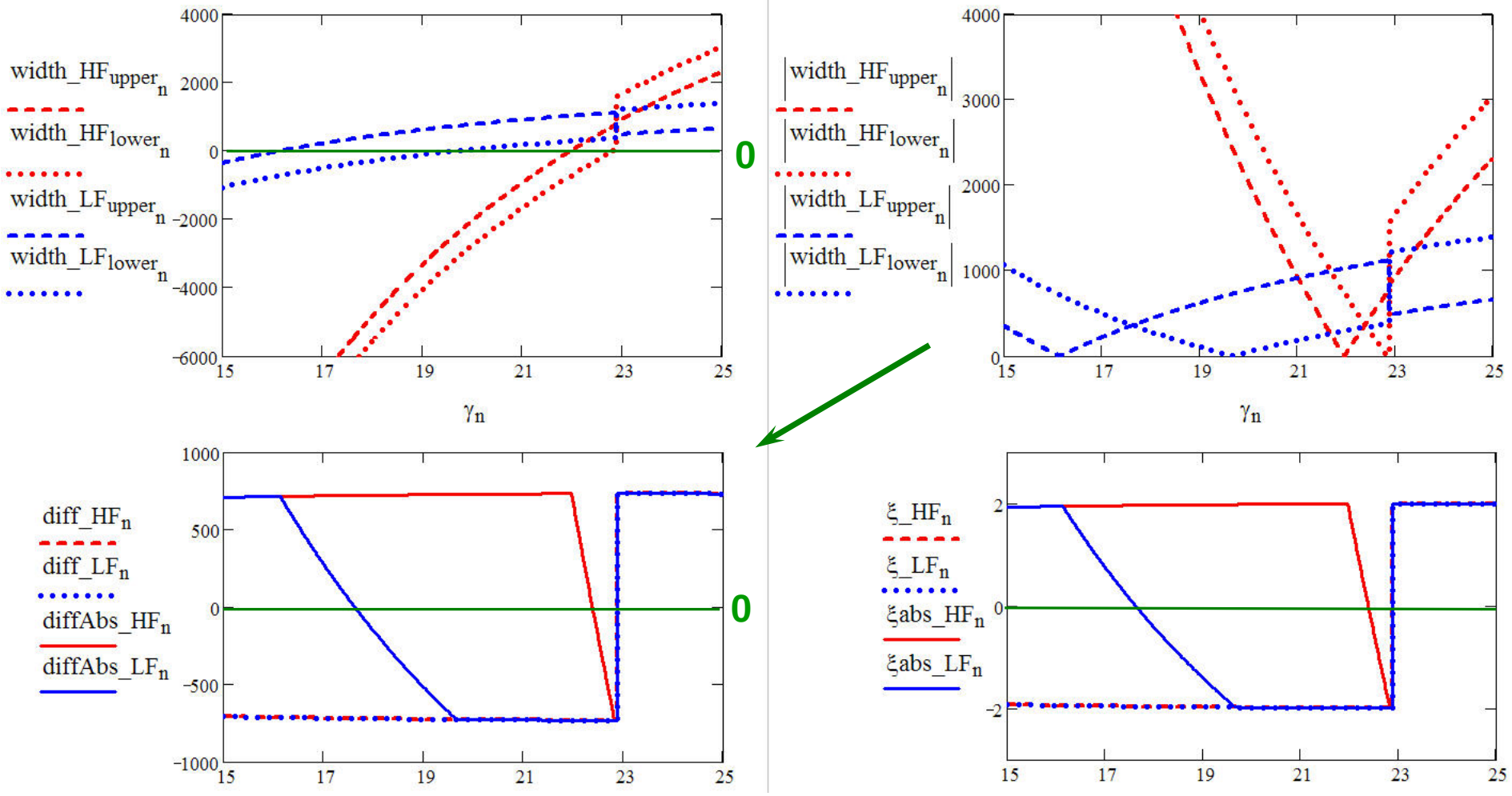

HF or LF Schottky?

- Spectral power density comparison
  - Beta functions at transition – LFS is ~10dB in horiz, ~6dB in vert
  - Linewidth due to Q' = 2 is ~+/-350Hz
  - Spread due to ~.01 octupole is ~800Hz
  - Spread due to $N\eta dp/p$ ~300Hz (HFS) / 40Hz (LFS)
  - Octupole dominates, relative FOM goes as Q, HF Schottky has ~x40 spectral power density, ~16dB advantage,
  - beta fcns reduce HF Schottky advantage to ~6dB horiz, 10dB vert
- HF Schottky
  - Advantage - 6 to 10dB dB relative to LFS
  - Disadvantages
    - fast sweep (700KHz from -2sec to +2sec), high Q (resonance width ~400KHz) means line-hopping needed
    - 'missiles/bleedthru'
- LF Schottky
  - Advantages
    - Slower sweep, lower Q (resonance width ~2.5MHz), no line hopping needed
    - No missiles
    - Available at injection for studies
  - Disadvantage -6 to -10dB relative to HFS
  - However, white noise excitation

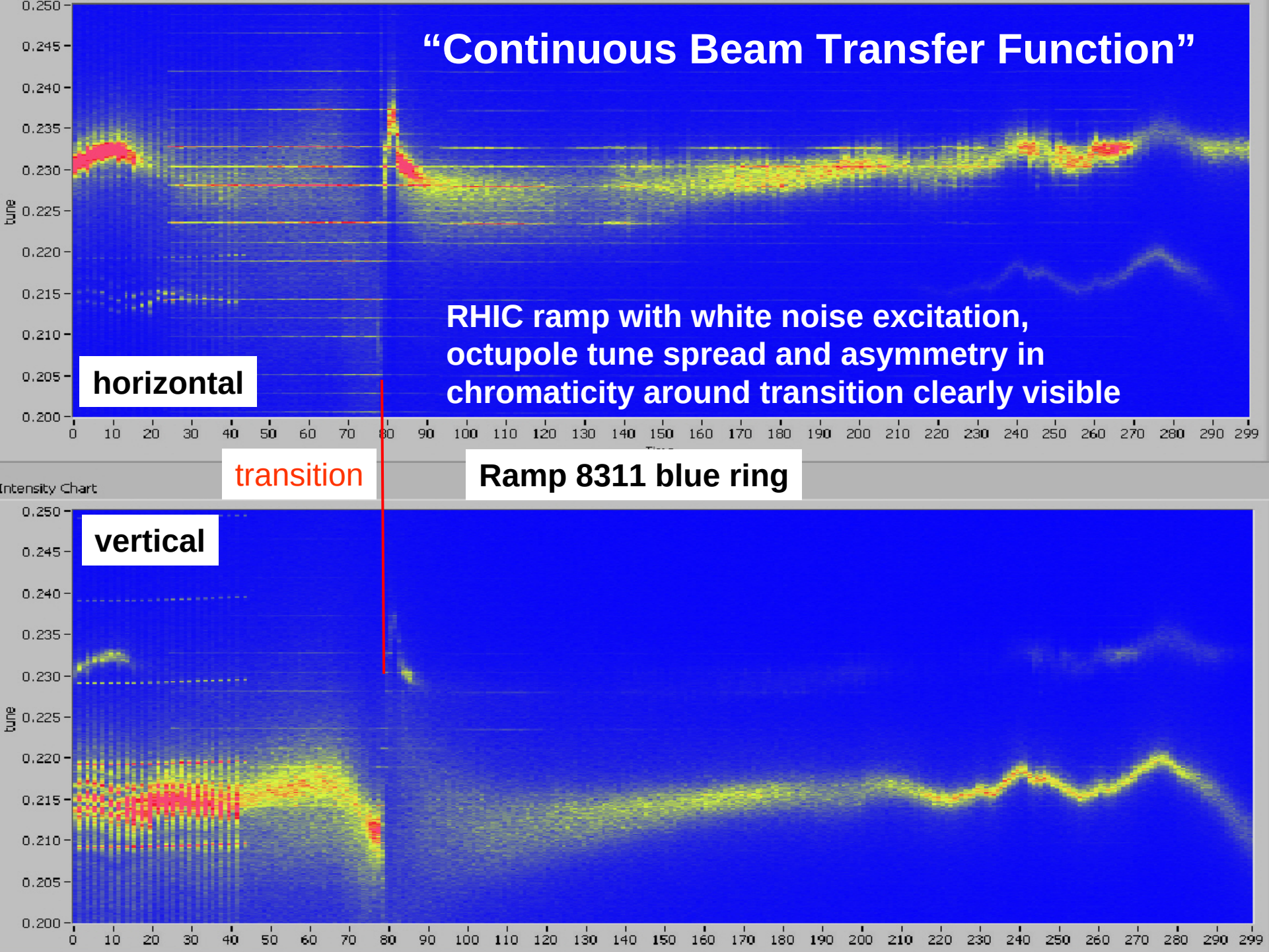
“Continuous Beam Transfer Function”
RHIC ramp with white noise excitation, octupole tune spread and asymmetry in chromaticity around transition clearly visible
horizontal
transition
Ramp 8311 blue ring
Intensity Chart
vertical
tune
0.250
0.245
0.240
0.235
0.230
0.225
0.220
0.215
0.210
0.205
0.200
0 10 20 30 40 50 60 70 80 90 100 110 120 130 140 150 160 170 180 190 200 210 220 230 240 250 260 270 280 290 299

HF or LF Schottky?

The plan – look at both, with initial emphasis on LF Schottky at injection

- Possible to do anything with this parasitic to instrumentation setup in blue?

‘line hopping’:
frequency swing from 2 sec before transition until 2 sec after is ~700KHz
3dB BW of pickup is ~400KHz

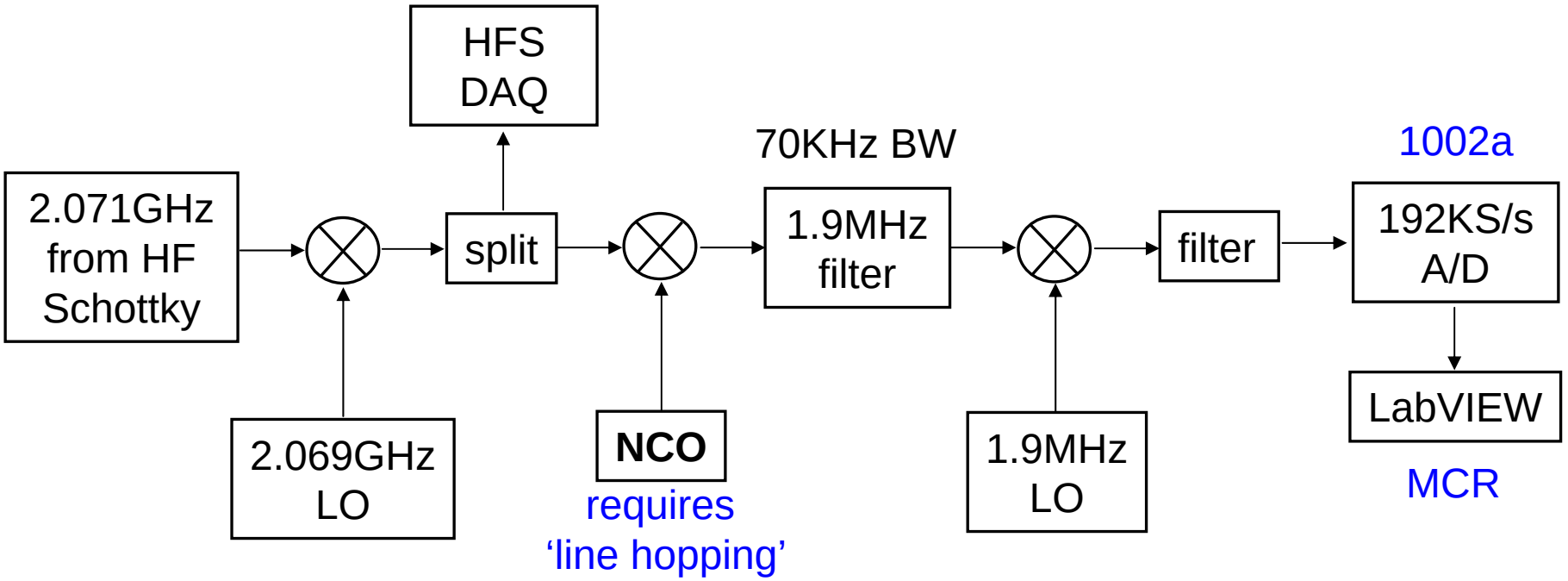

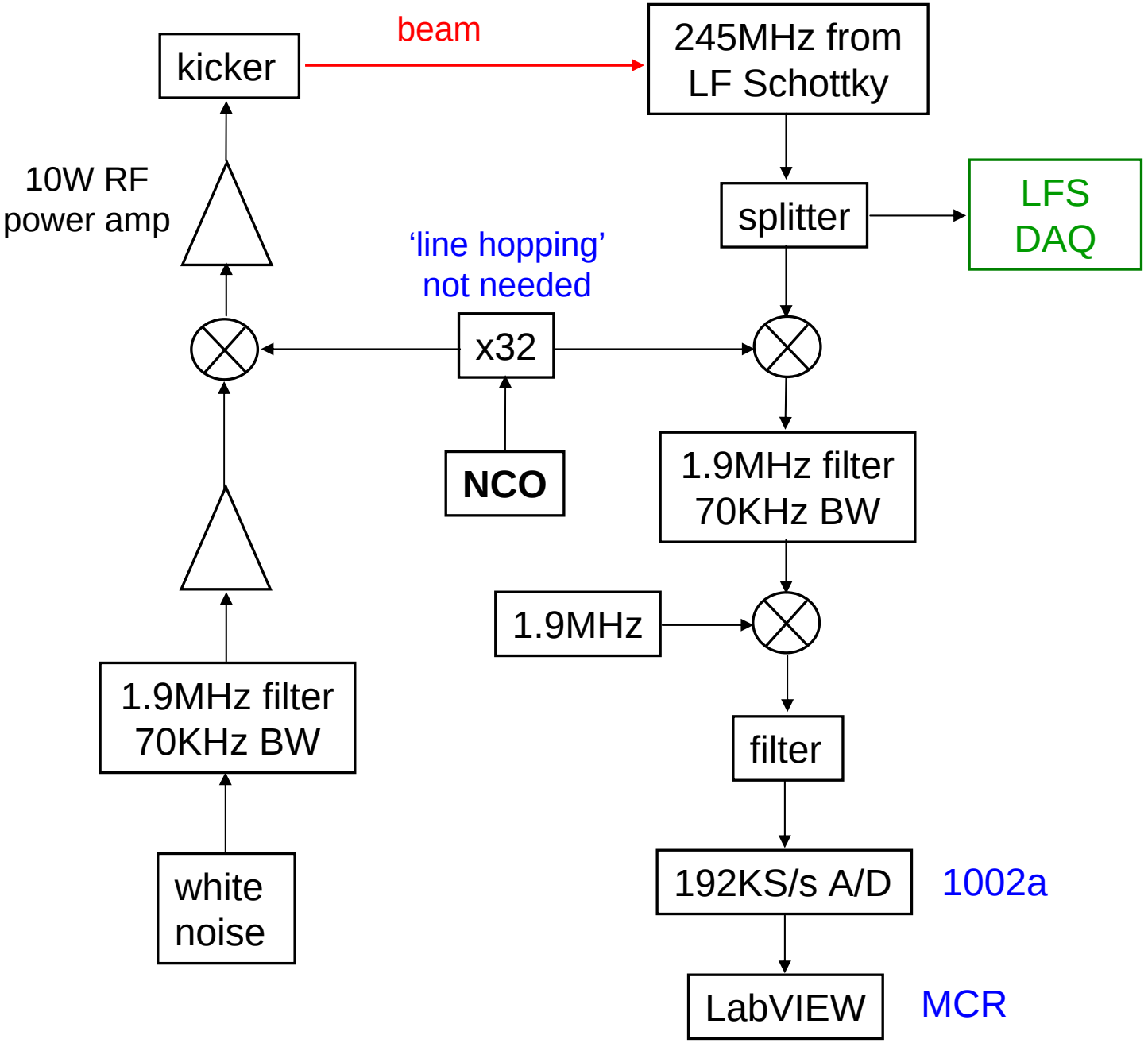
kicker
beam
245MHz from
LF Schottky
10W RF
power amp
splitter
LFS
DAQ
'line hopping'
not needed
x32
NCO
1.9MHz filter
70KHz BW
1.9MHz
1.9MHz filter
70KHz BW
filter
white
noise
192KS/s A/D
1002a
LabVIEW
MCR

Potential Issue

- Coupling, and the ability to resolve the eigenmodes

Coupling around Transition

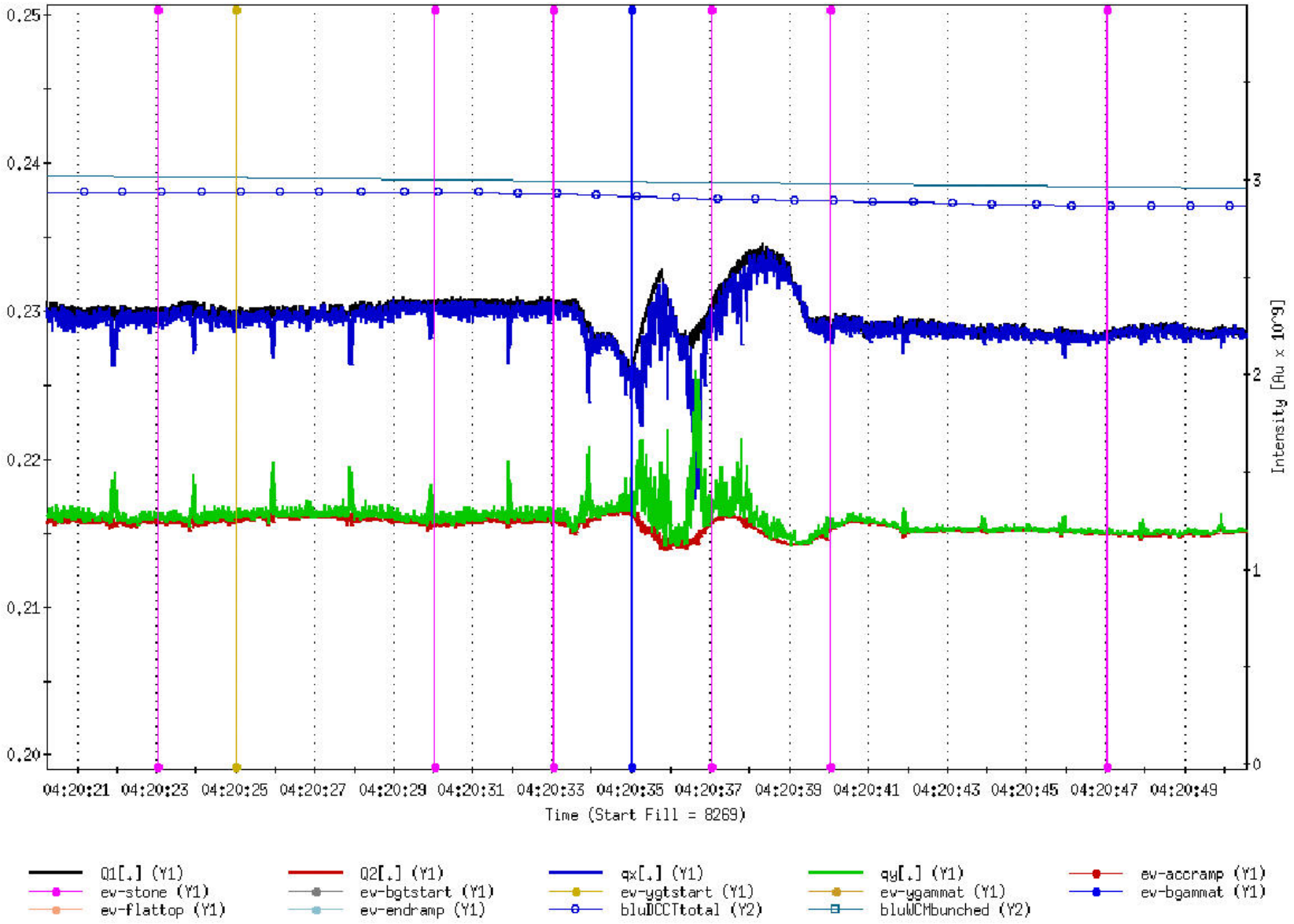

Potential Issue

- Coupling, and the ability to resolve the eigenmodes
  - If coupling is seen, reduce octupole to remove this source of tune spread, better resolve the eigenmodes
  - Again, the downside is need for lower intensity, resulting in diminished S/N
    - but we have white noise excitation

Mains Harmonics in Time Domain

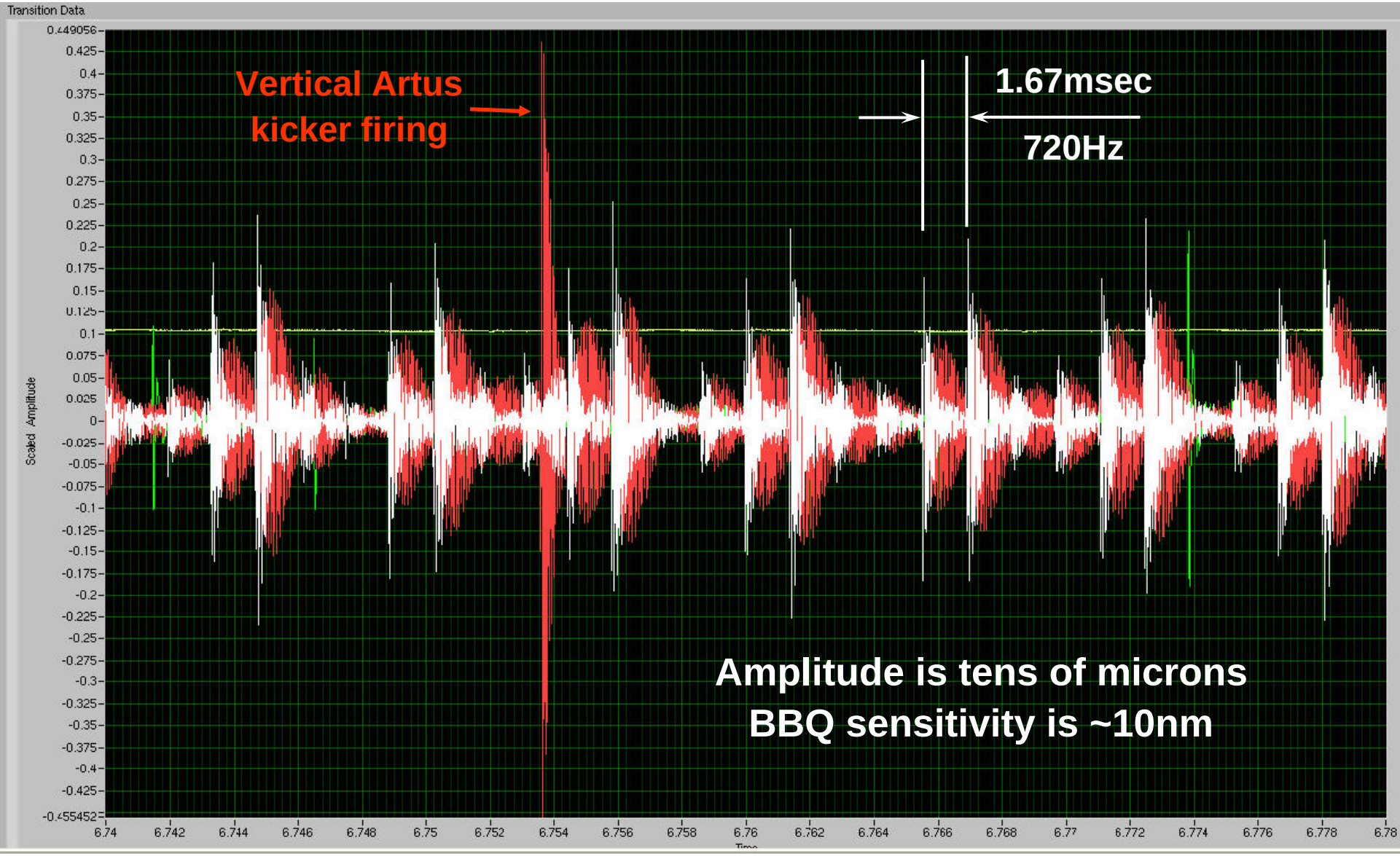

Outline

- Transition Chromaticity Monitor
- **‘Hybrid’ tune tracker?**
- Chromaticity measurement and feedback
- Other Stuff
  - Beam transfer functions
  - Streaming audio
  - Coupling echoes?

‘Hybrid’ tune tracker

- Dynamic range at transition was the showstopper for the 245MHz PLL
- 3D AFE and BBQ appeared to be the solution to this problem
  - Large dynamic range of the diodes – they are the first component in the signal path
  - ~160dB suppression of the revolution line plus ~10nm sensitivity
- However, BBQ operates in the coherent spectrum
  - We discover mains harmonics, which are ~50dB more severe in RHIC than Tevatron or SPS
  - We discover the ‘anomalous BTF’ at injection with ions
  - No obvious solution on the horizon for either of these problems in the coherent spectrum, they both are solid obstacles to making tune feedback operational

- So how about a ‘hybrid’ system? Direct diode detection of 245MHz pickup
- For 245MHz pickup, improved tunnel preamps on LF Schottky – another 10dB headroom
- Some data from last run (following slides), many questions
  - Noise floor? At high frequency?
  - Coherence at high frequency?
  - Performance of 3D AFE peak detector with resonant pickup?
  - Phase compensation? Mix in tunnel?

Ramp 8687 (early May)

Yellow LF Schottky 245MHz signal as seen thru 3D AFE

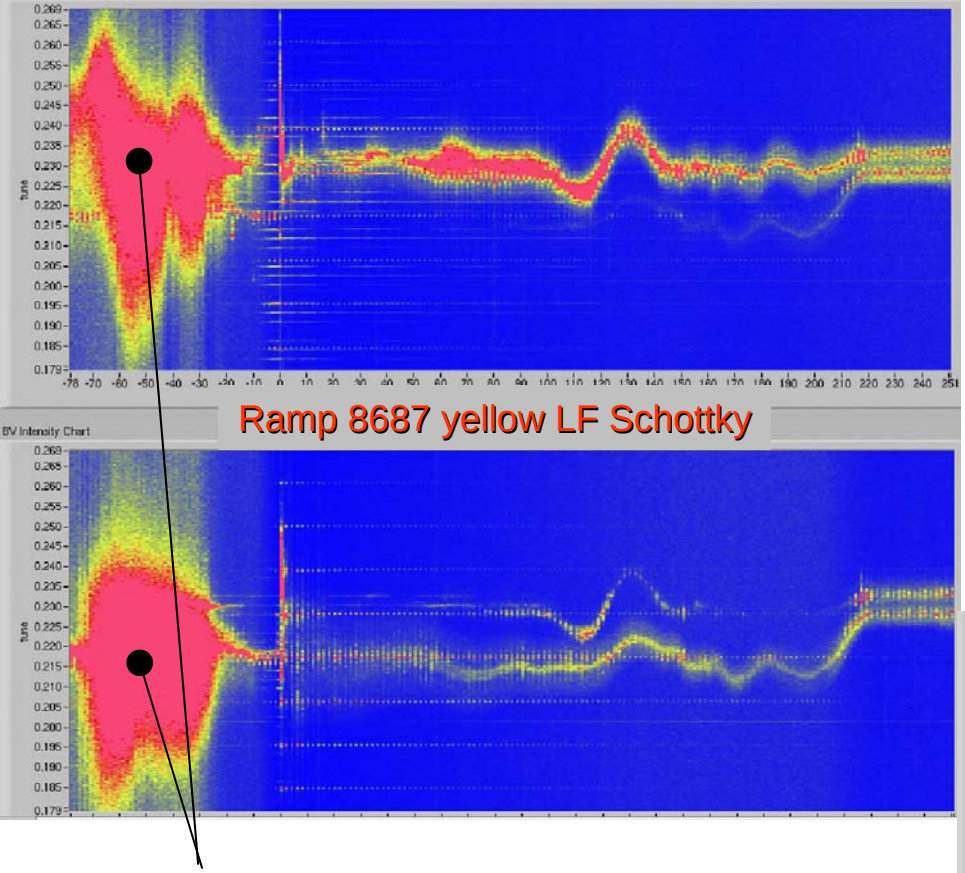

Yellow 1m long stripline signal as seen thru 3D AFE

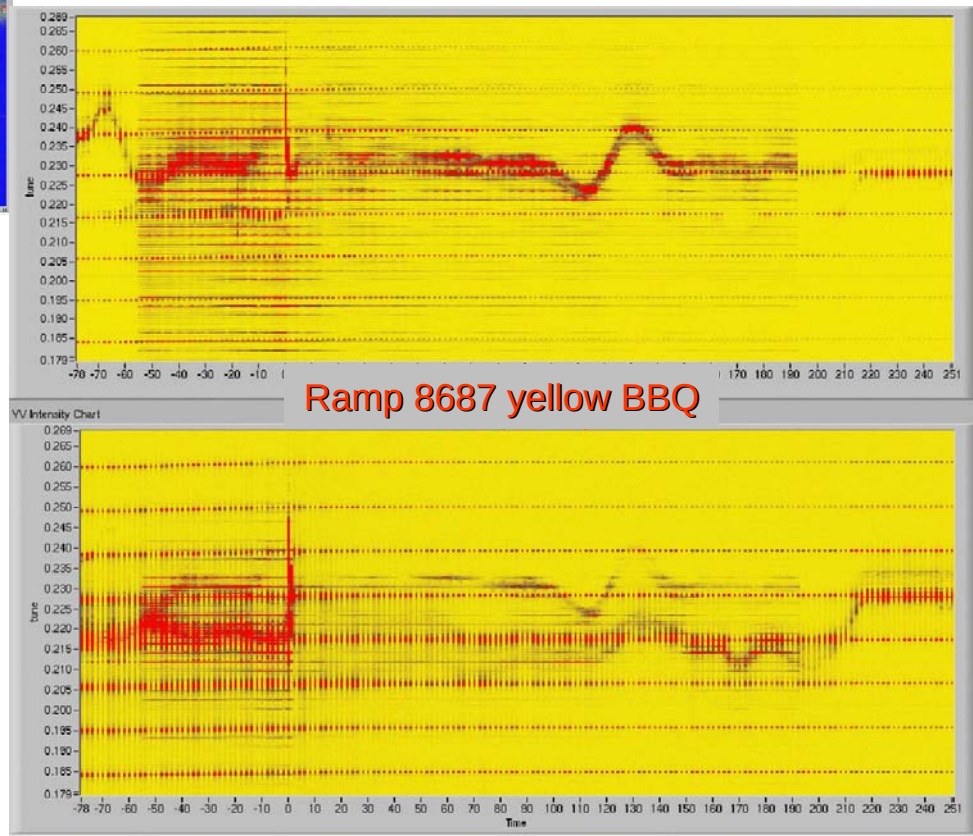

What is this???

- **'clock' jitter? Blue is master**
- **higher transverse modes?**
  - **we consistently see stronger beam response below γ_t**
- **else?**

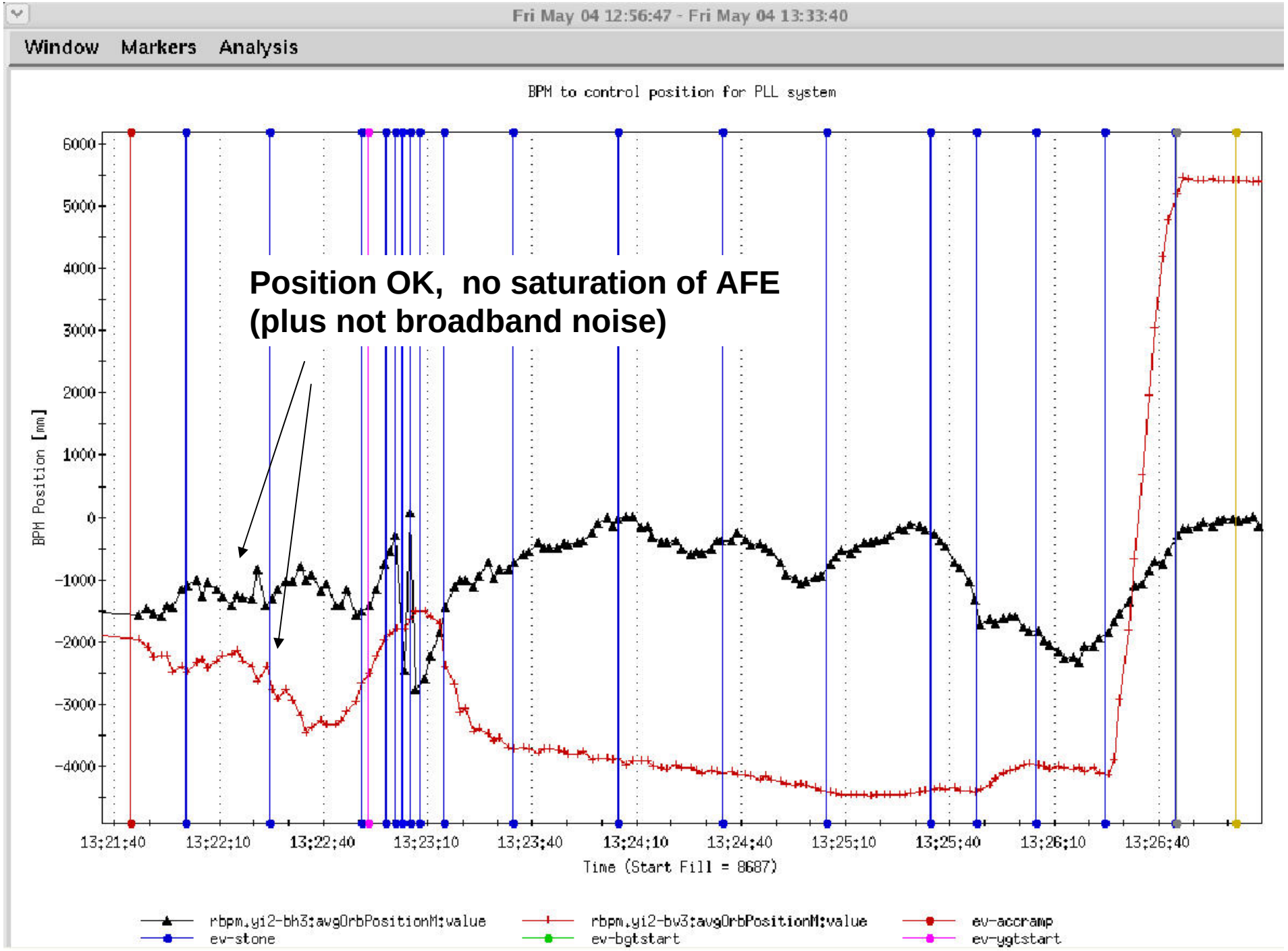
Fri May 04 12:56:47 - Fri May 04 13:33:40
Window
Markers
Analysis
BPM to control position for PLL system
Position OK, no saturation of AFE
(plus not broadband noise)
BPM Position [mm]
6000
5000
4000
3000
2000
1000
0
-1000
-2000
-3000
-4000
13:21:40
13:22:10
13:22:40
13:23:10
13:23:40
13:24:10
13:24:40
13:25:10
13:25:40
13:26:10
13:26:40
Time (Start Fill = 8687)
rbpm.yi2-bh3:avgOrbPositionM:value
ev-stone
rbpm.yi2-bv3:avgOrbPositionM:value
ev-bgtstart
ev-accramp
ev-ygtstart

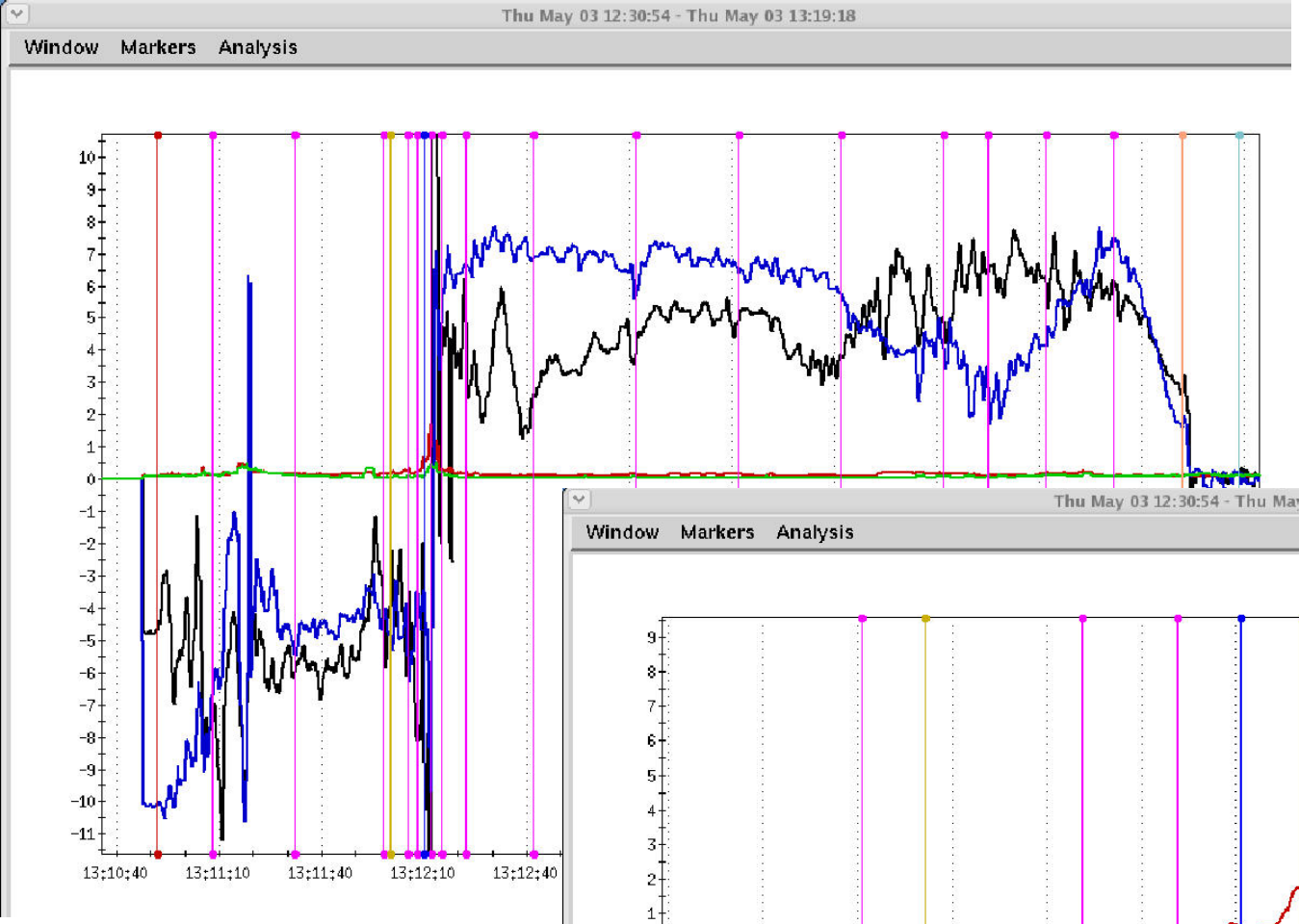

No obvious cause in chromaticity

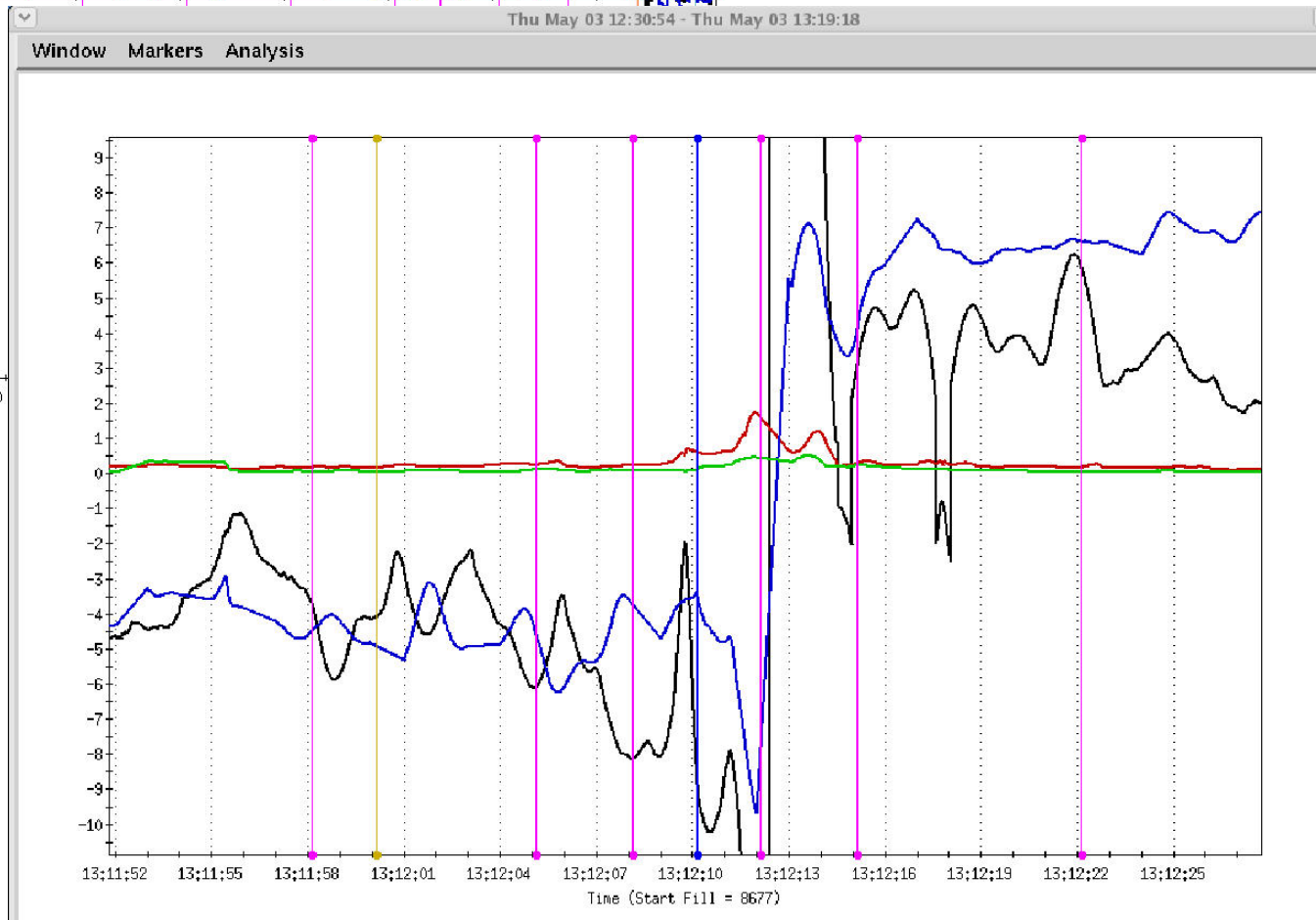

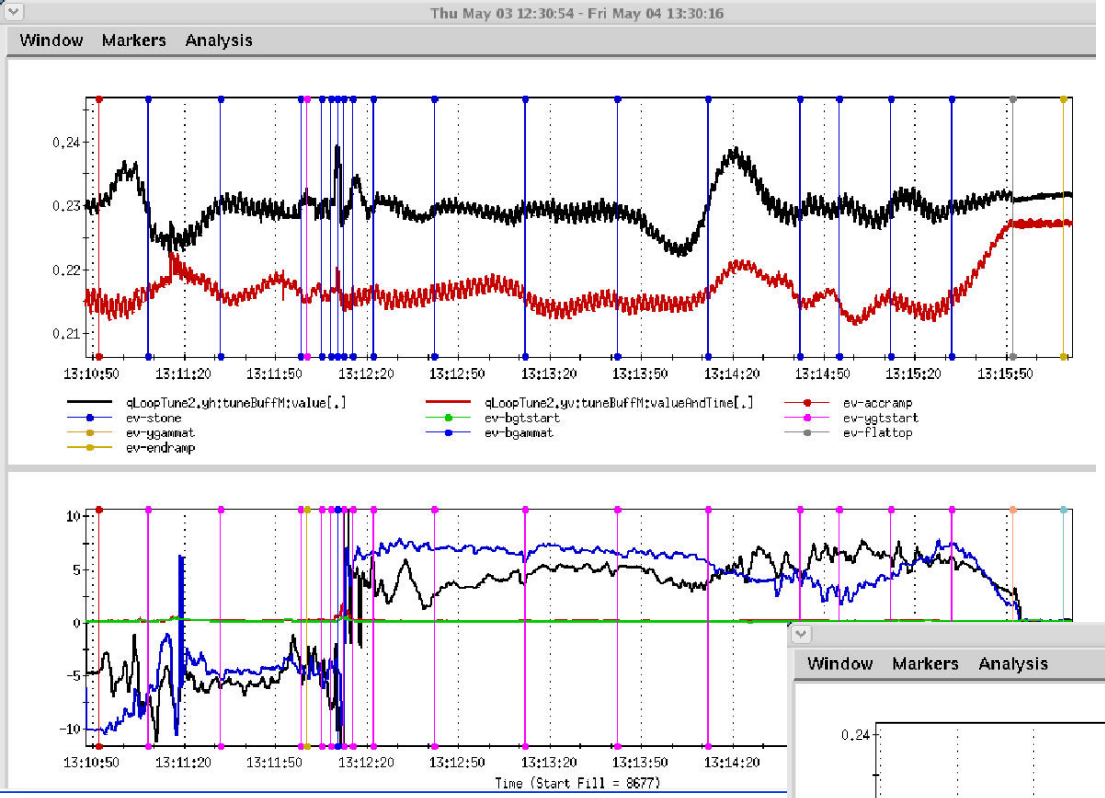

Large chrom kills loop gain (can't use kicker feedback because of tune scalloping), makes BBQ more susceptible to capture by mains harmonics

H chrom measurement around transition is corrupted by mains harmonics

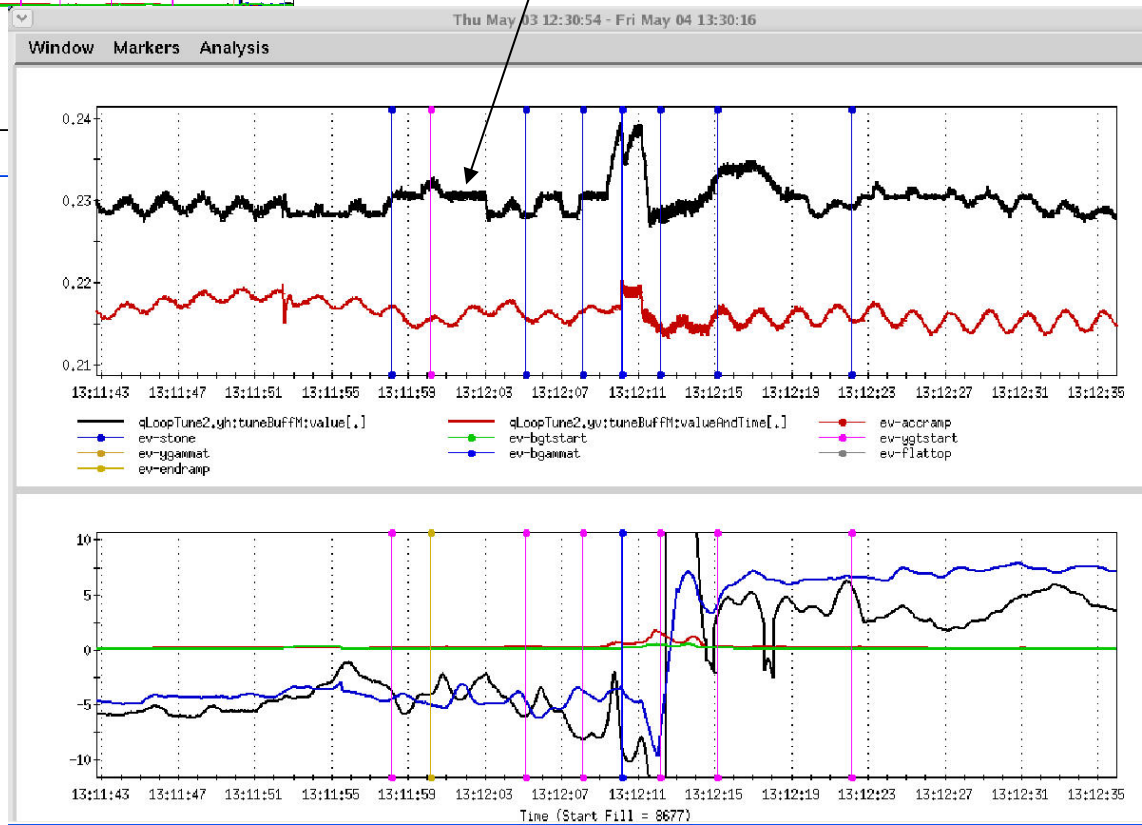

Ramp 8687 time domain around transition

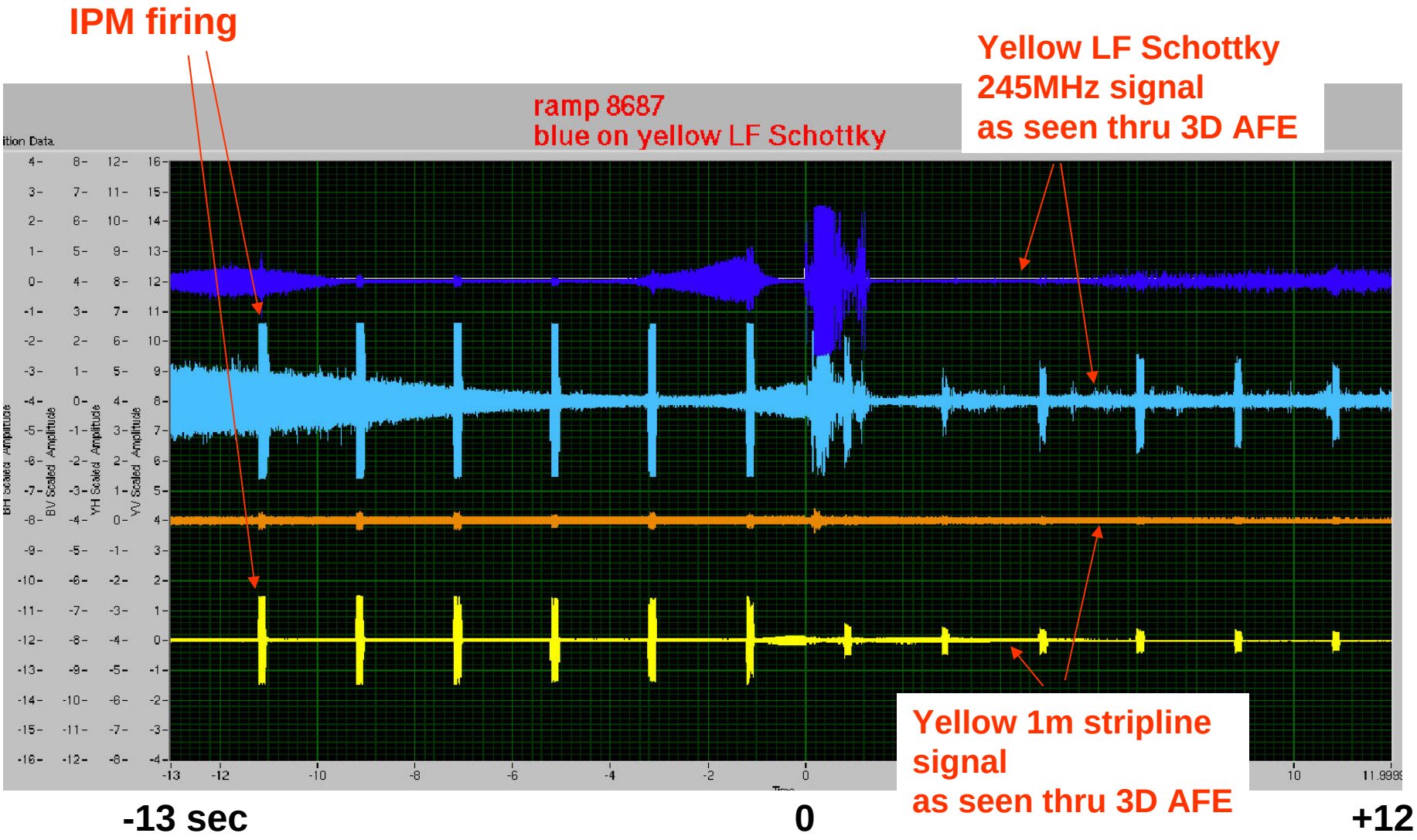

Ramp 8687 around transition

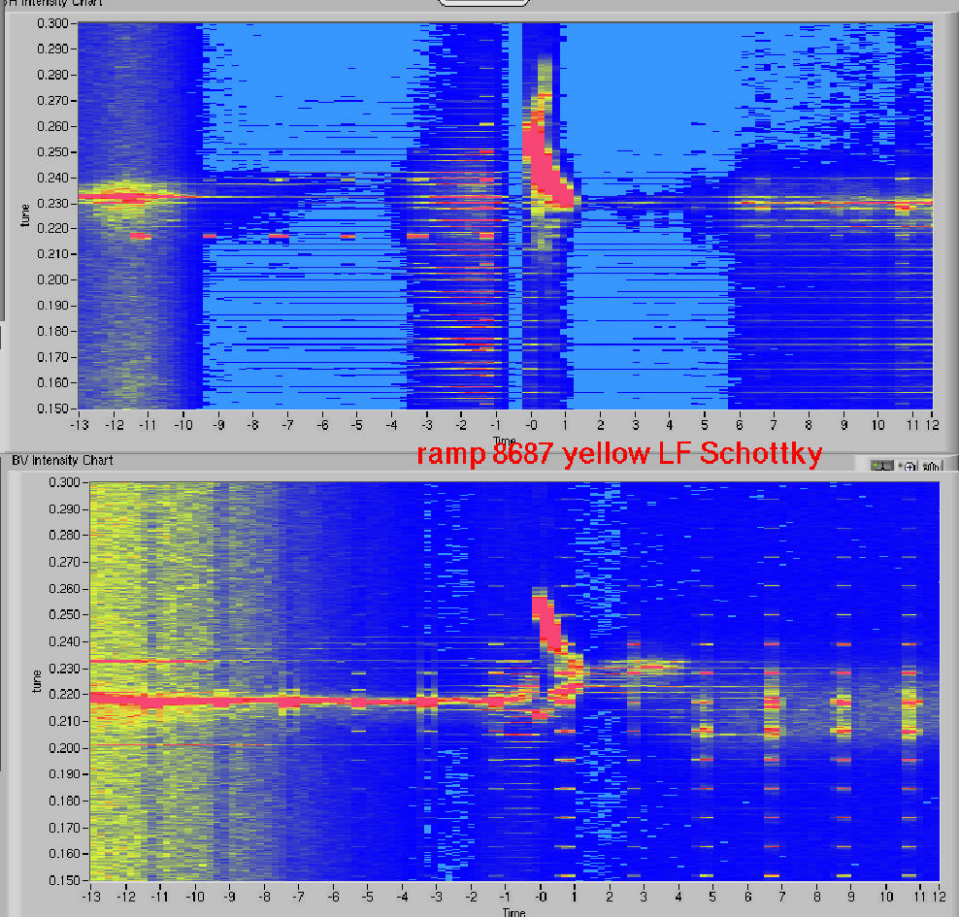

Yellow LF Schottky
245MHz signal
as seen thru 3D AFE

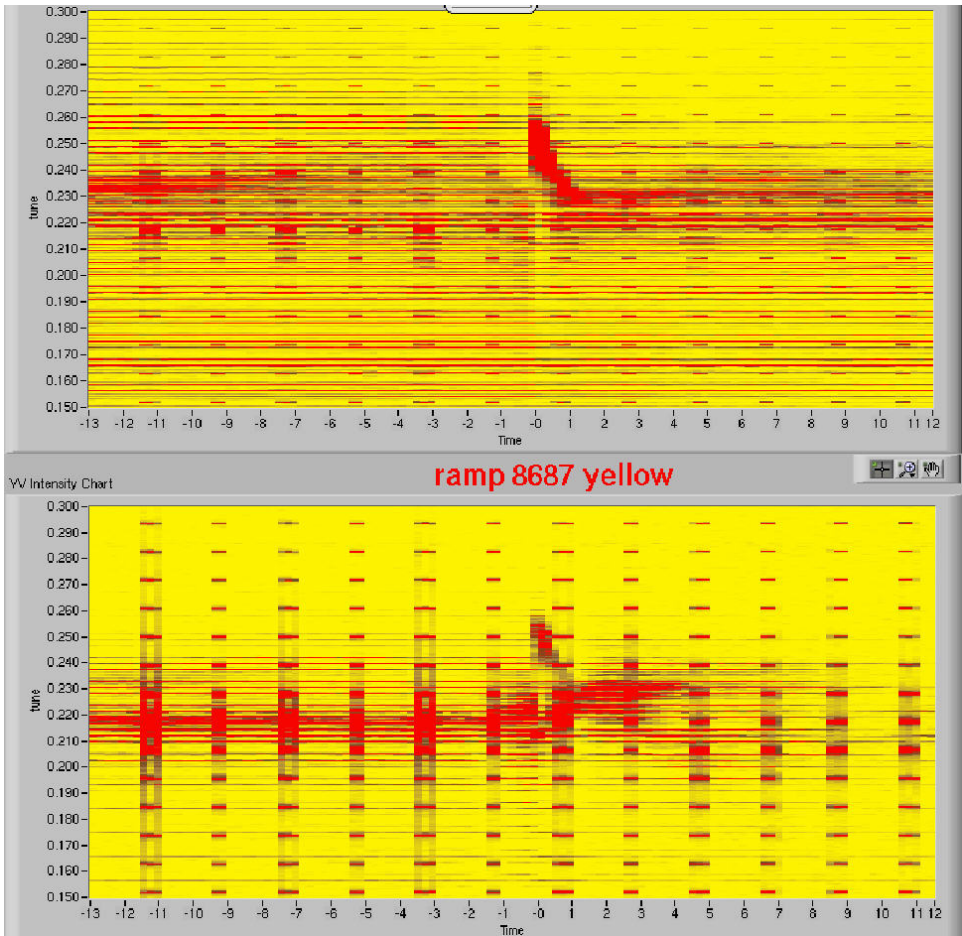

Yellow 1m long
stripline signal
as seen thru 3D AFE

Possible 'Hybrid' Tune Tracker Block Diagram

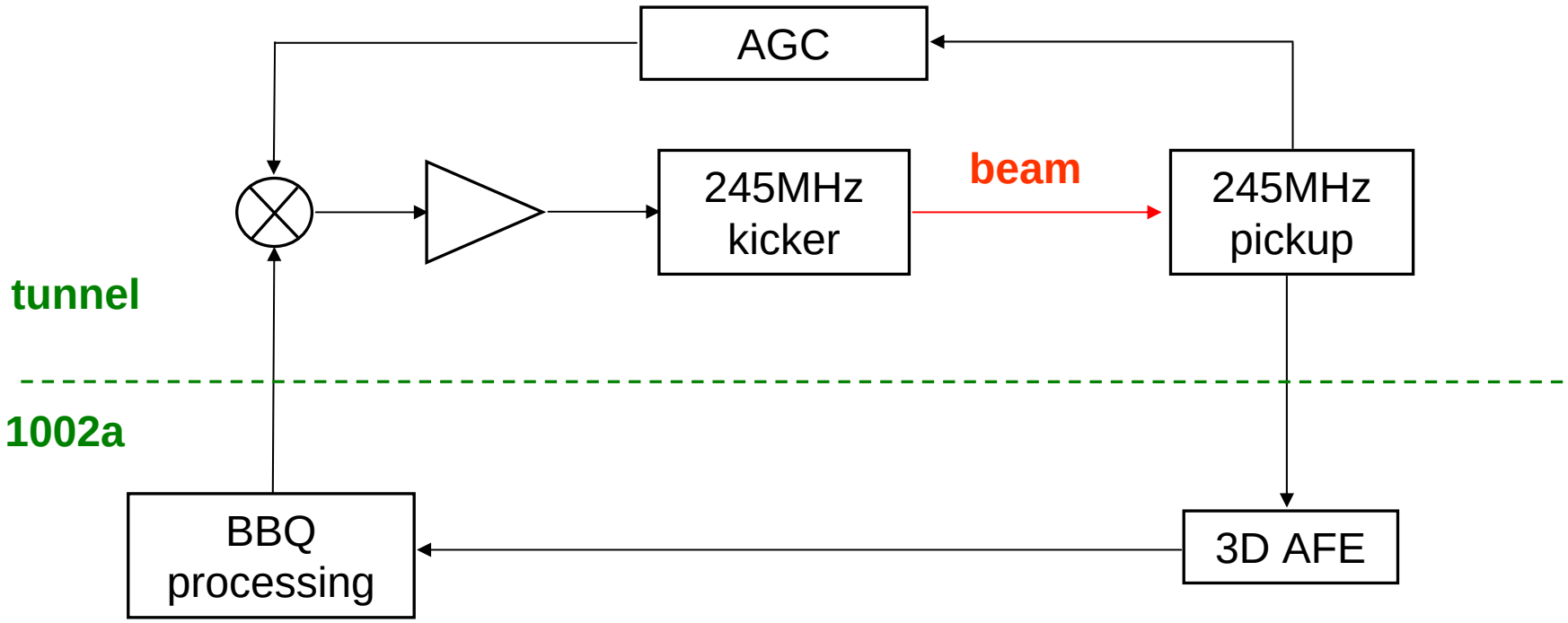

Advantages of this approach to 'hybrid':

- **phase compensation not needed**
- **excite the same spectrum you are measuring**
- **'bleedthru' less problematic**
- **minimal modification to existing BBQ**

Outline

- Transition Chromaticity Monitor
- ‘Hybrid’ tune tracker?
- **Chromaticity measurement and feedback**
- Other Stuff
  - Beam transfer functions
  - Streaming audio
  - Coupling echoes?

Run 8 Plan for Chromaticity Feedback

- **Scenario 1** – no anomalous BTF at injection with ions
  - Early in commissioning (before any ramps in blue?)
    - turn on tune and coupling feedback, turn on radial wiggles, assess quality of chromaticity measurement (all hardware and software is in place)
    - If good, ramp in this configuration (it will improve chrom measurement on the ramp, therefore will speed ramp development)
  - When controls infrastructure is sorted out, do APEX ramps with chrom feedback
  - During proton ramp development – use chrom feedback (250GeV!!!)
- **Scenario 2** – anomalous BTF at injection with ions, no anomalous BTF at injection with protons
  - During APEX at store with ions
    - turn on tune and coupling feedback, turn on radial wiggles, assess quality of chromaticity measurement
    - If good, close chromaticity feedback loop and explore
  - During proton ramp development – use chrom feedback
- **Scenario 3** – anomalous BTF at injection with ions AND protons
  - Hybrid tune tracker

Chromaticity Measurement

- Baseline is radial modulation - perturbs beam orbit
  - Good results with both 245MHz (next slide) and BBQ (slide after next) tune trackers
    - Chrom feedback does not need to be fast, at least initially
- Method of choice appears to be continuous head-tail
  - advantage – no momentum perturbation, operates parasitic to tune tracker excitation
  - Two theoretical studies and one simulation confirm the principle
  - Results of numerous beam studies are promising
- Other possibilities – all require beam perturbation, possible additional emittance growth
  - Multiple carrier - no momentum/position perturbation
    - Complicated by synchrotron satellites
    - Central betatron linewidth is defined by amplitude dependent tune spread, rather than momentum dependent, is therefore non-linear
  - Beam Transfer Function - no momentum/position perturbation
    - Chirped excitation is one possibility, complicates FPGA programming considerably if simultaneous with tune tracking
    - White noise excitation is another possibility, extracting phase information is complicated (but not impossible)
  - phase modulation
    - advantage - does not stress tune tracker (mod freq beyond PLL BW)
    - disadvantages – frequency must avoid synchrotron frequency (tough to do with ion ramp), possible beam loss, not clear S/N is better than slow radial

Chromaticity via radial modulation with 245MHz PLL in RHIC
three successive ramps - good results under sequencer control

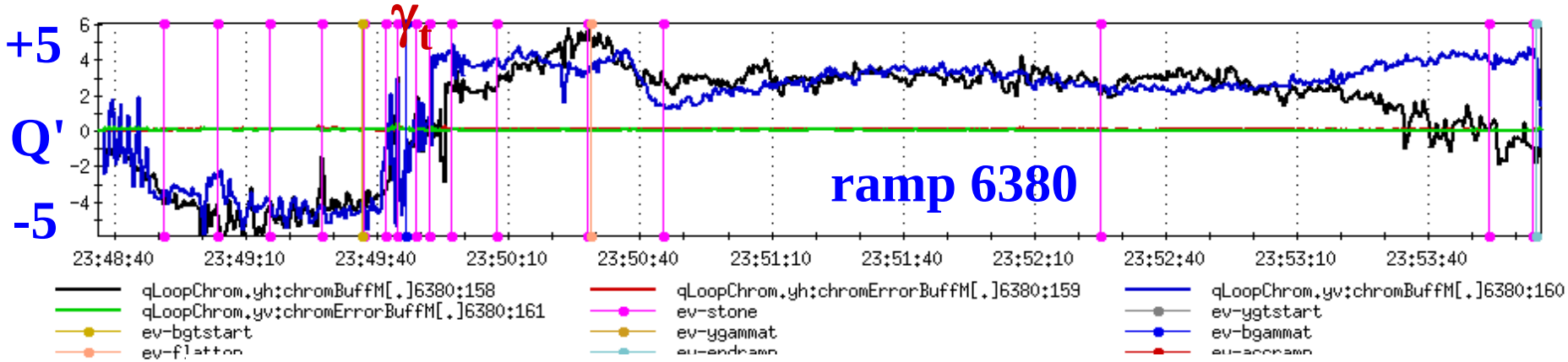

dp/p of +/-10^{-4} gives ~+/-100μ radial modulation (RHIC&LHC)

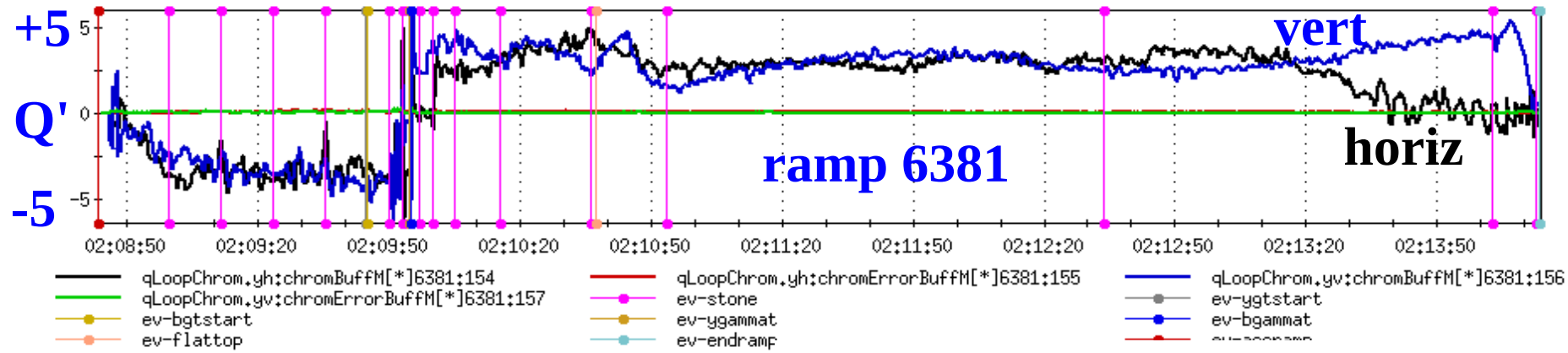

in RHIC modulation is at 1Hz

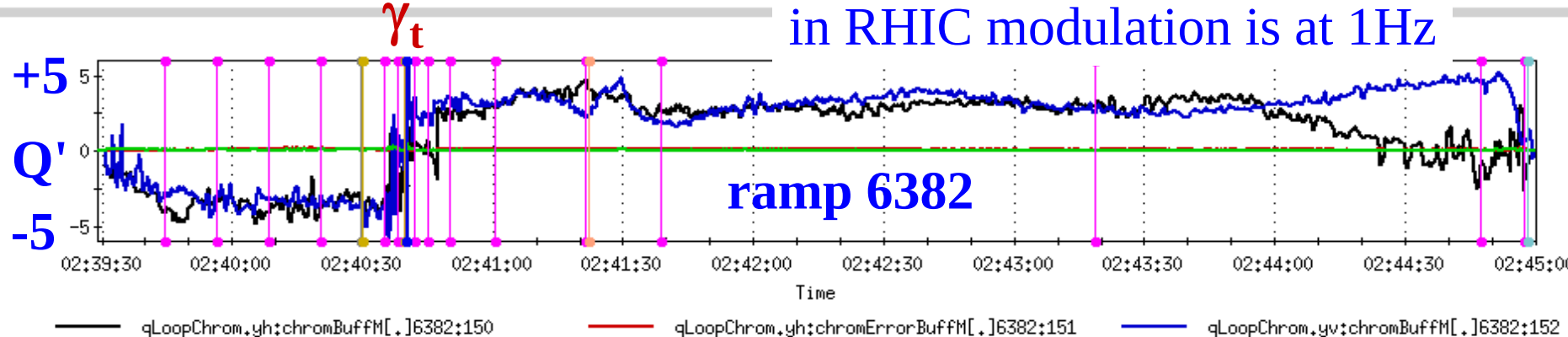

Chromaticity via radial modulation with BBQ in RHIC Run 7
two successive ramps for correcting and measuring result

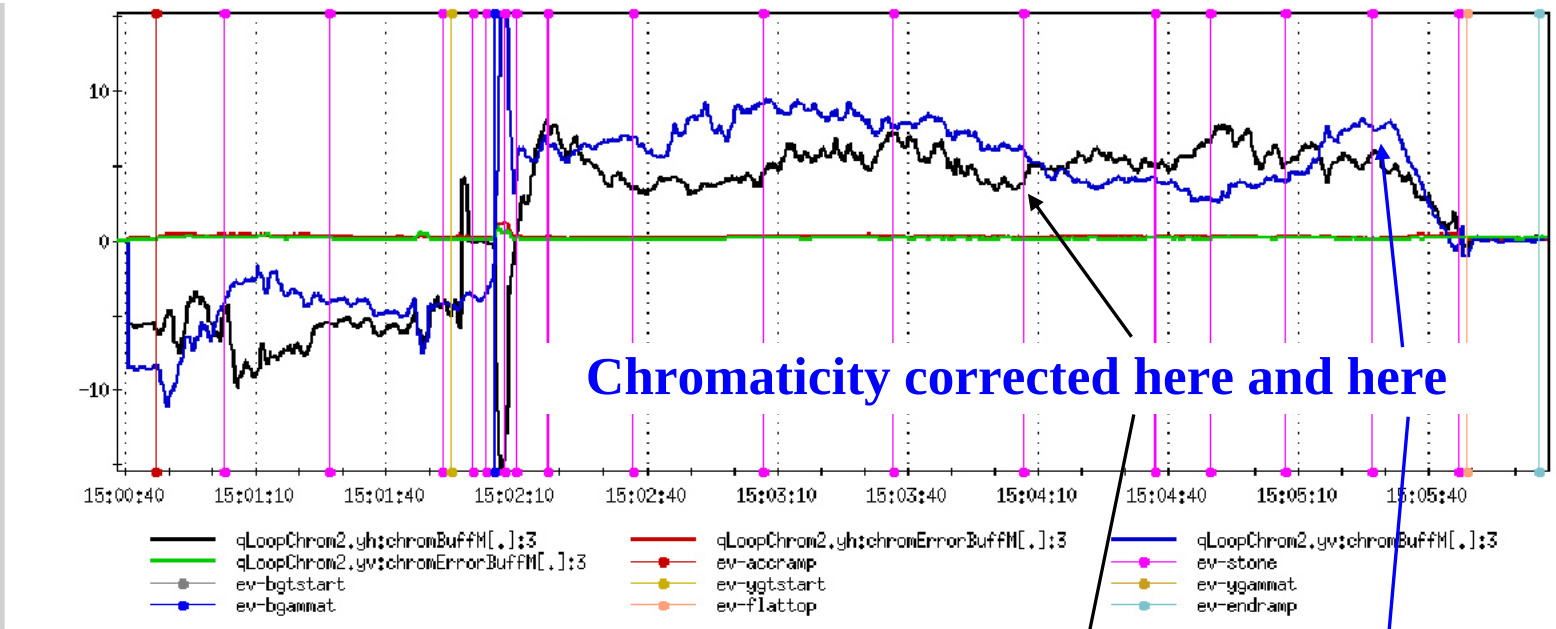

Chromaticity corrected here and here

second ramp

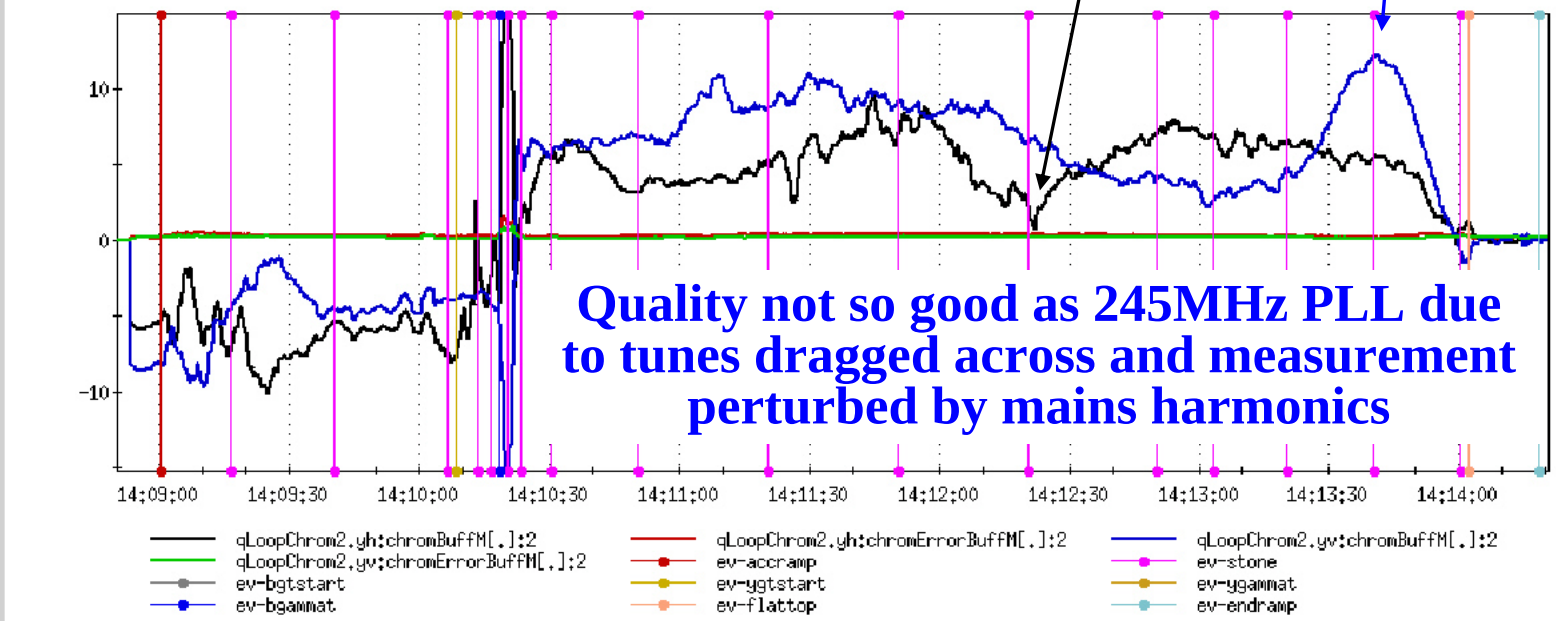

Quality not so good as 245MHz PLL due to tunes dragged across and measurement perturbed by mains harmonics

first ramp

Chromaticity Measurement

- Baseline is radial modulation - perturbs beam orbit
  - Good results with both 245MHz (next slide) and BBQ (slide after next) tune trackers
    - Chrom feedback does not need to be fast, at least initially
- Method of choice appears to be continuous head-tail?
  - advantage – no momentum perturbation, operates parasitic to tune tracker excitation
  - Two theoretical studies and one simulation confirm the principle
  - Results of numerous beam studies are promising
- Other possibilities – all require beam perturbation, possible additional emittance growth
  - Multiple carrier - no momentum/position perturbation
    - Complicated by synchrotron satellites
    - Central betatron linewidth is defined by amplitude dependent tune spread, rather than momentum dependent, is therefore non-linear
  - Beam Transfer Function - no momentum/position perturbation
    - Chirped excitation is one possibility, complicates FPGA programming considerably if simultaneous with tune tracking
    - White noise excitation is another possibility, extracting phase information is complicated (but not impossible)
  - phase modulation
    - advantage - does not stress tune tracker (mod freq beyond PLL BW)
    - disadvantages – frequency must avoid synchrotron frequency (tough to do with ion ramp), possible beam loss, not clear S/N is better than slow radial

continuous head-tail measurement

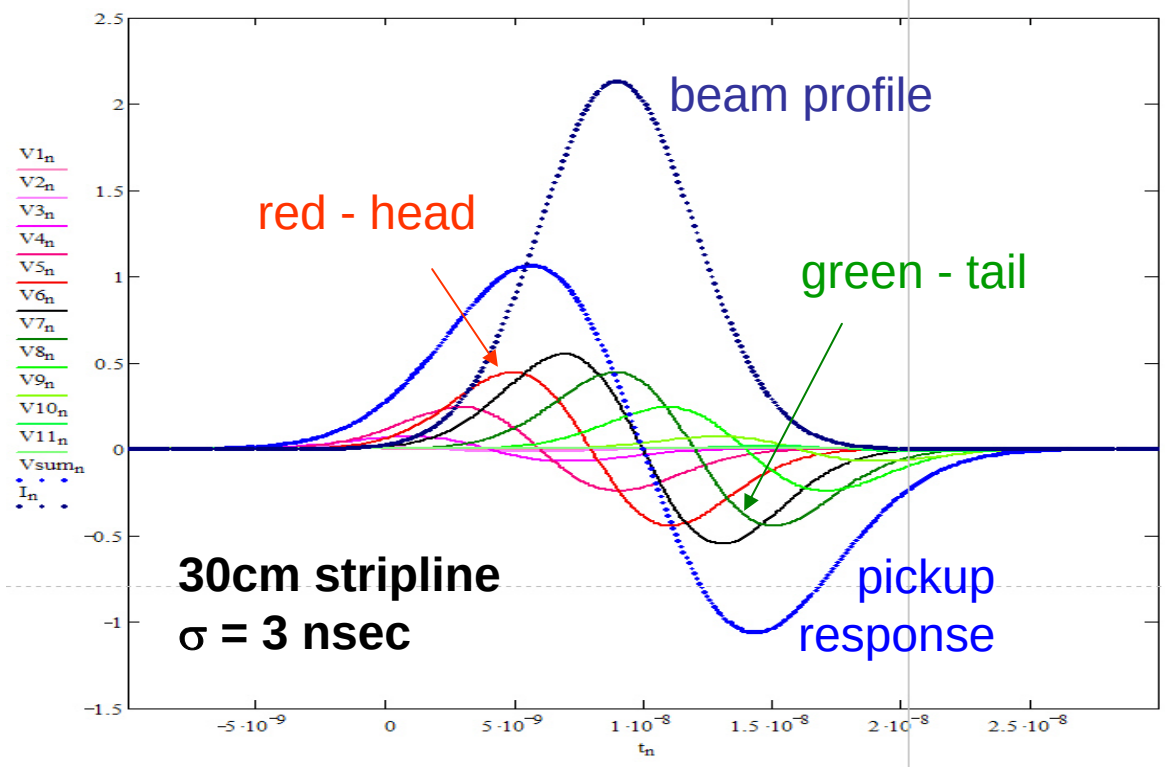

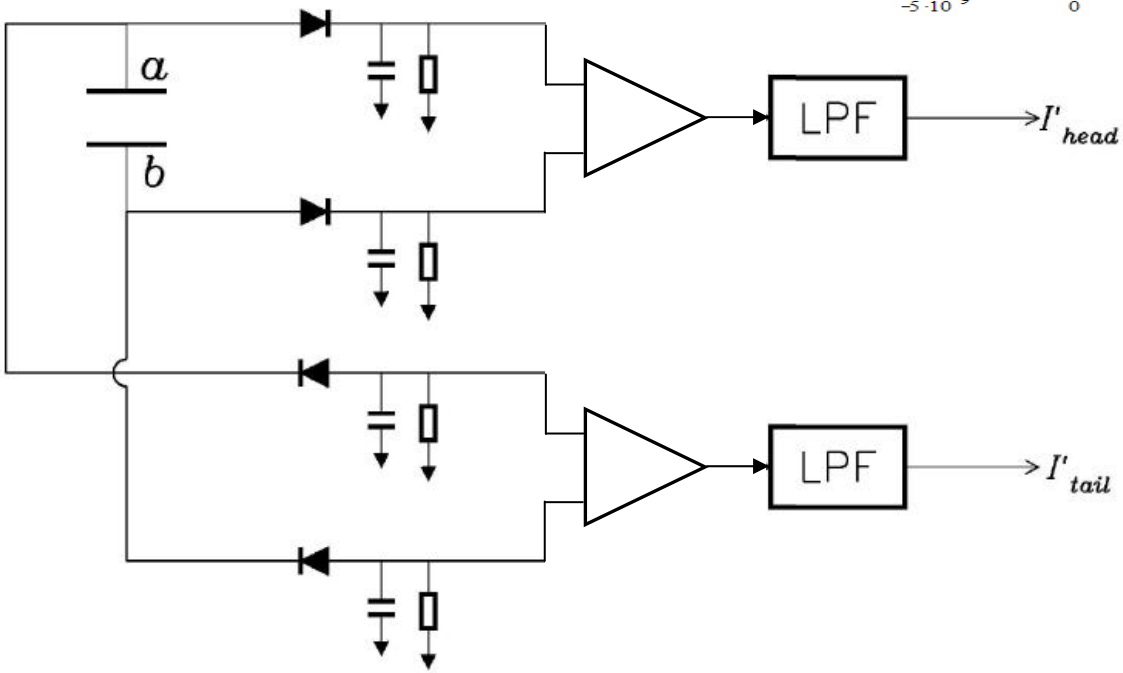

Theoretical studies of continuous H-T

Proceedings of PAC07, Albuquerque, New Mexico, USA FRPMS014

CHROMATICITY MEASUREMENT USING A CONTINUOUS HEAD-TAIL KICKING TECHNIQUE*

see also
http://larpdocs.fnal.gov/LARP/DocDB/0005/000547/001/headtail_24April2007.pdf

C.Y. Tan†, Fermilab, Batavia, IL 60510, USA
V.H. Ranjbar‡, Tech-X, Boulder, CO 80303, USA

Large Hadron Collider Project **LHC Project Report 986**

The two studies independently arrive at the same conclusion, confirm feasibility of the continuous head-tail approach

A Theory of the Beam Transfer Function (BTF) with Amplitude Detuning and Chromaticity induced Head-Tail Phase Shift

S. Fartoukh (AB/ABP)

Abstract

The feasibility of chromaticity determination by measuring head-tail phase shifts has been demonstrated both in the CERN-SPS, at HERA (DESY) and at RHIC (BNL). This method, however, requires to apply sizable transverse kick to the beam which might turn to be detrimental to the LHC performance in view of the tight emittance growth budget allowed for this machine. The aim of this paper is to extend the theory to the case of a coherent beam excitation of small amplitude, in particular at a frequency equal to the beam betatron tune (Phase Locked Loop mode), with, as a result, the possibility of envisaging a chromaticity feed-back system based on this technique for the LHC.

Q' ~ 0

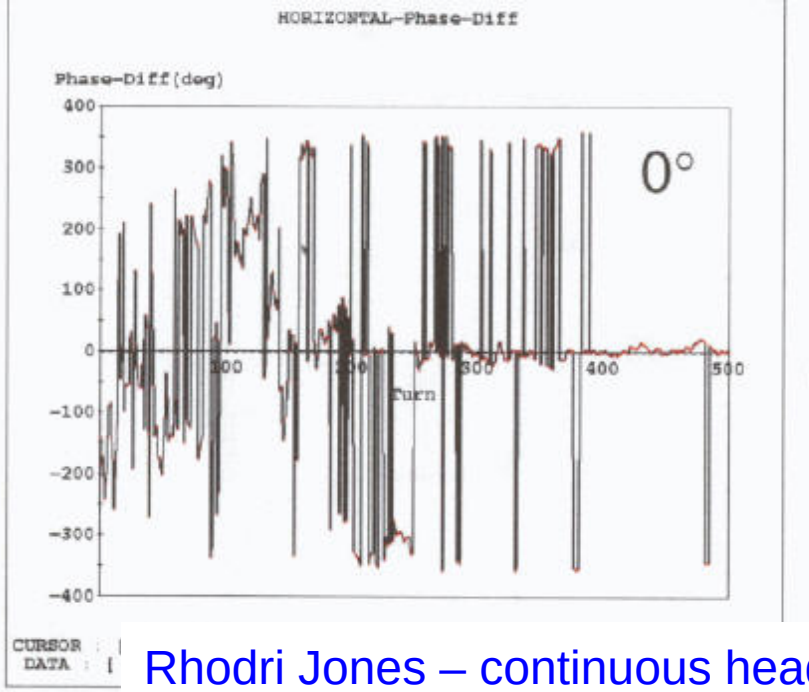

Q' ~ 10

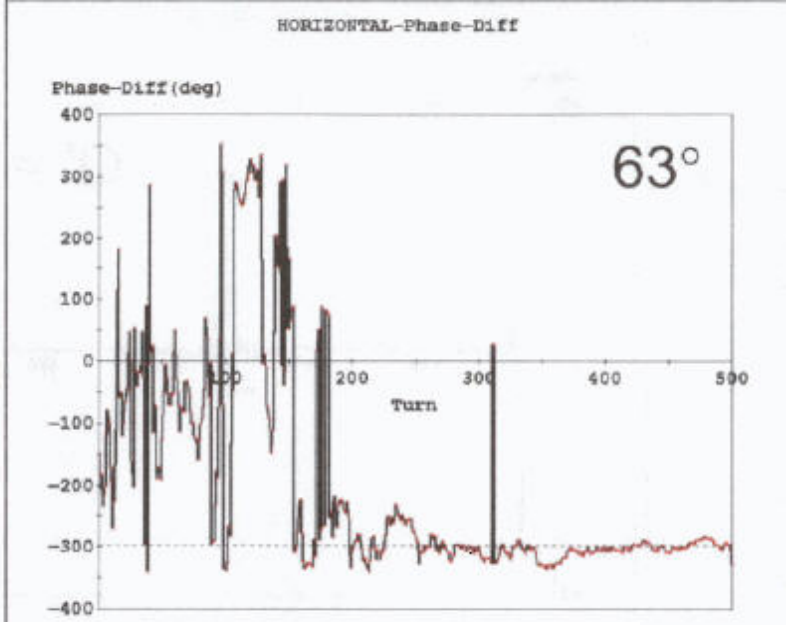

Rhodri Jones – continuous head tail 500 turn **simulation results**, phase difference between head and tail (settling time evident)

Q' ~ 5

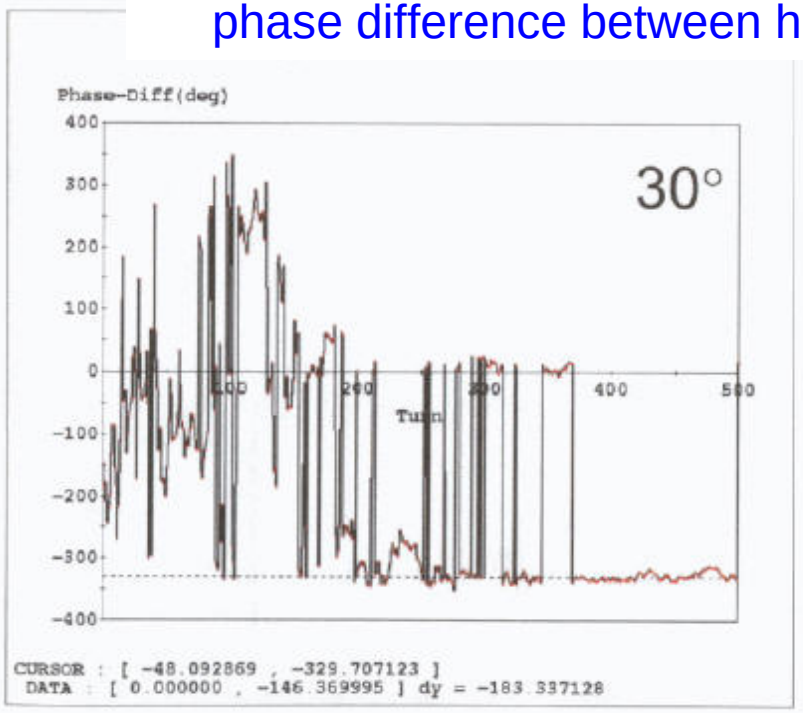

Q' ~ 15

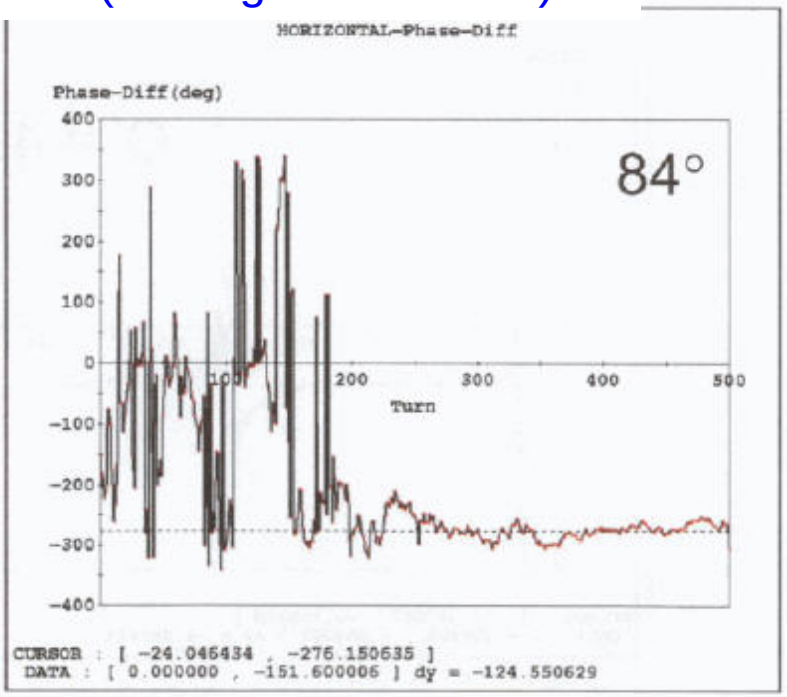

Experimental studies of continuous H-T

- Chronologically, the early experimental studies preceded the theoretical and simulation studies
- February 2006 at RHIC – Gasior and Cameron
  - Promising results
- April 2006 at Tevatron – Tan and Ranjbar
  - Different DAQ setup, results promising
- Sept 2006 at CERN SPS – CERN team plus Tan, Ranjbar, Cameron
  - Inconsistent good data quality, not immediately clear why
  - Only a few of ~20 data sets showed meaningful results
- Mar 2007 at Tevatron – Tan and Ranjbar
  - Used AC dipole excitation
  - Data confirms theory

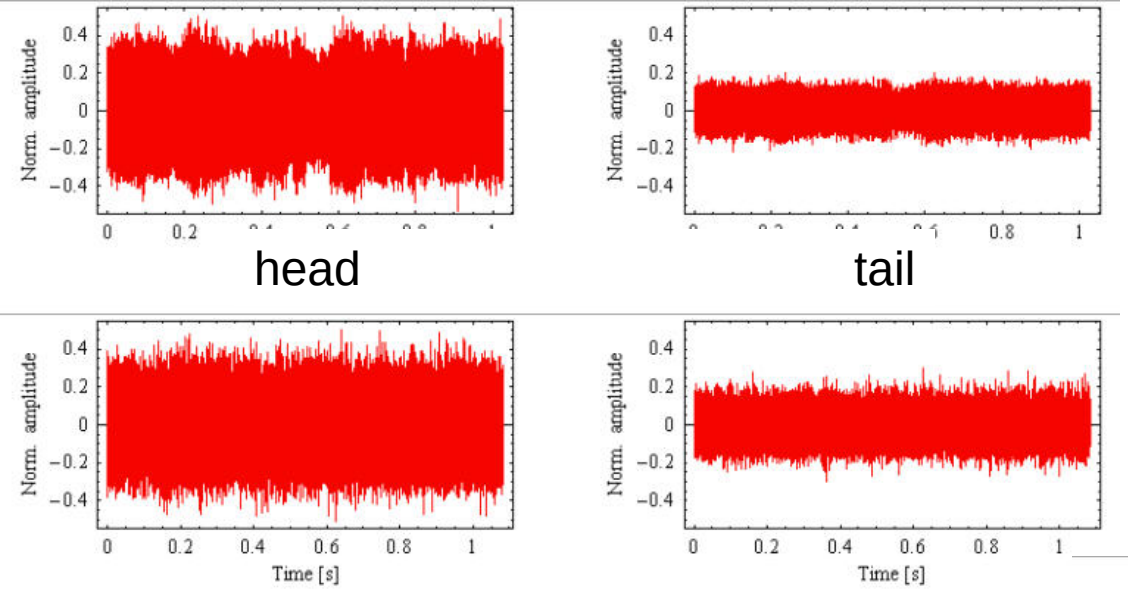

head

tail

$\xi \sim 2$

$\xi \sim 6$

1 second

February 2006
RHIC Run 6 -
continuous head-tail chromaticity measurement using BBQ (no momentum perturbation)

mean = .758

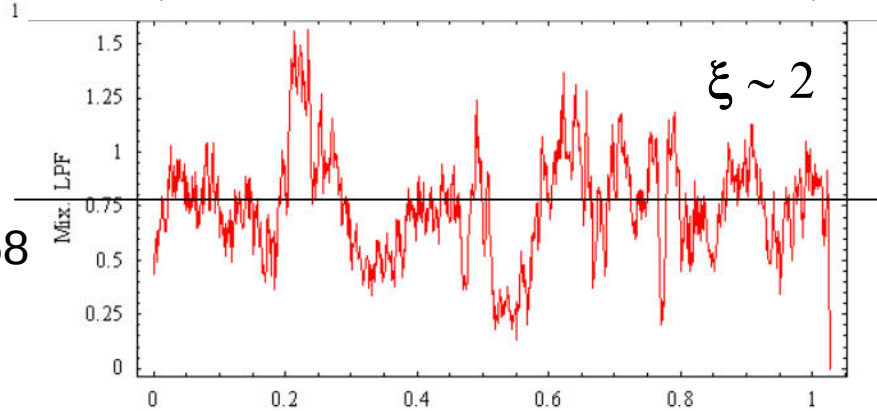

lowpass filtered head x tail

mean = .283

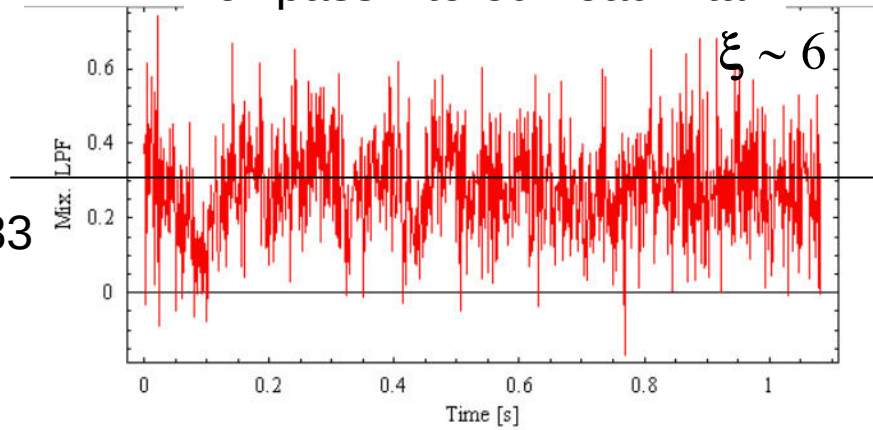

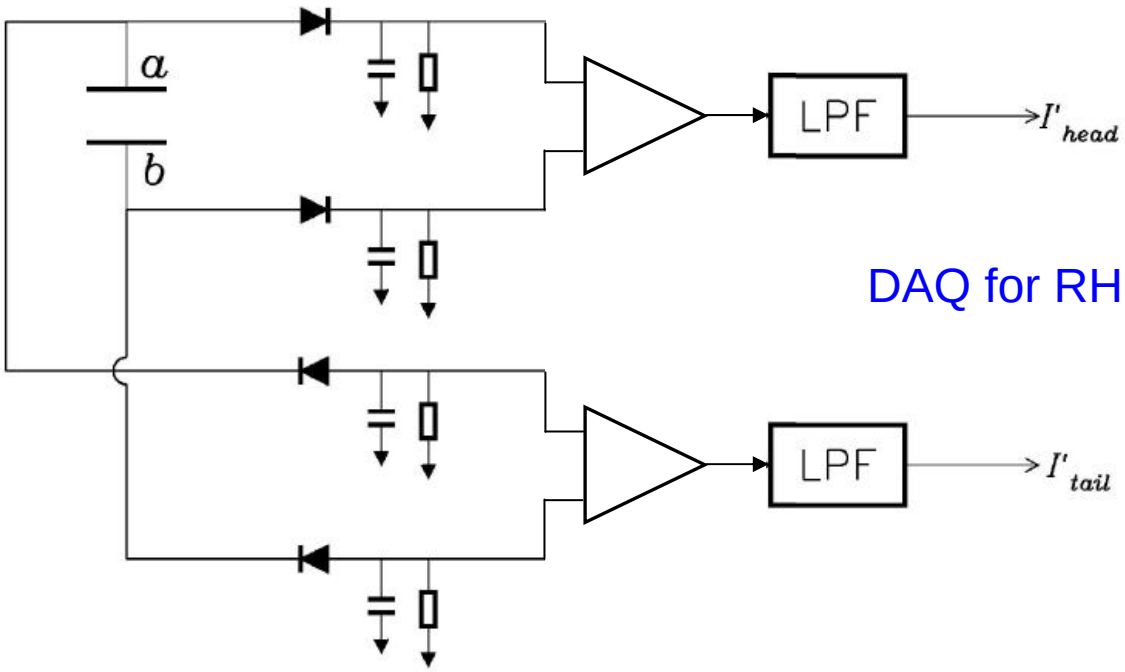

to A/D at 4x betatron frequency

DAQ for RHIC studies

to A/D at 4x betatron frequency

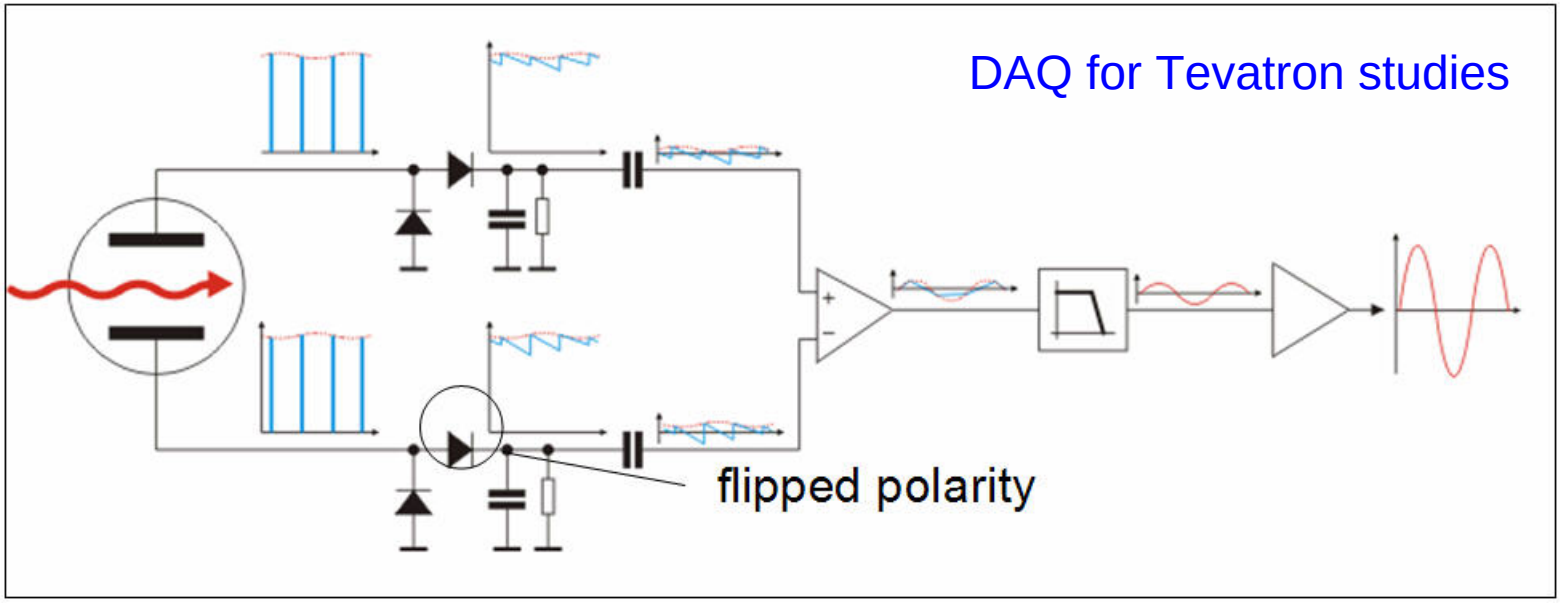

to 25MHz digital scope

Results of Apr 06 FNAL study

Notes:

- large excitation amplitudes were used (~1mm to 10mm)
- peak phase shift observed ~60 turns late for 3 lowest Q' values
- jitter observed in time delay between kick and peak response possible causes:
    - closed orbit offset
    - kick amplitude
    - bunch length variation
- overall, results are again promising

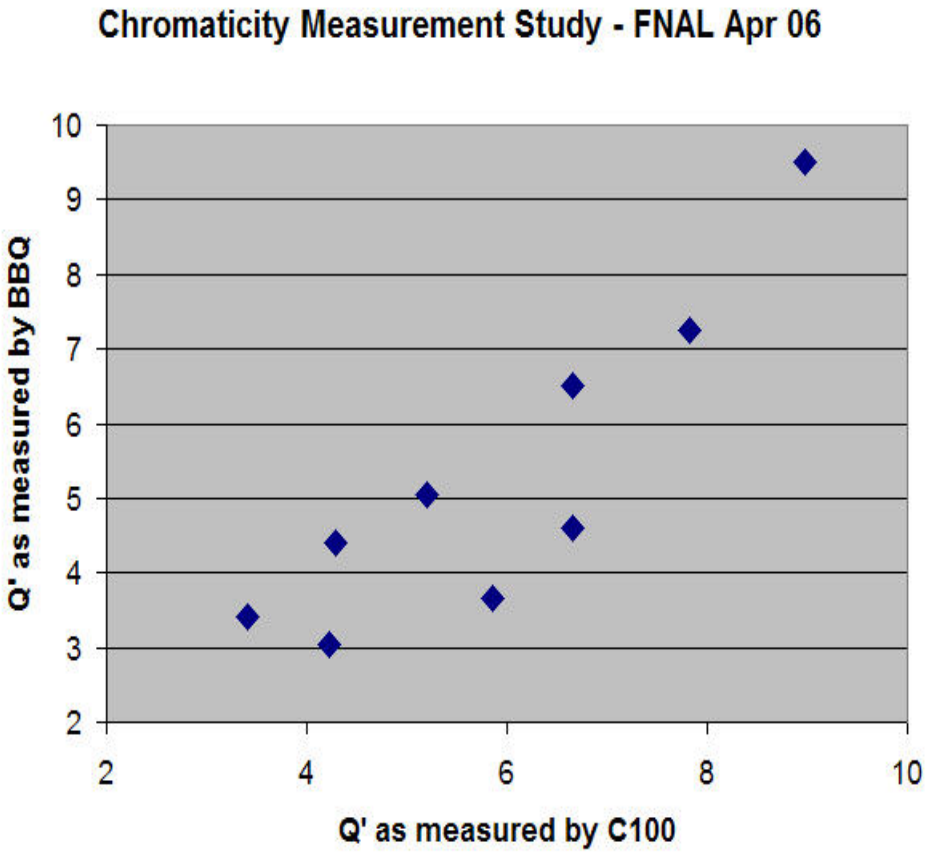

Sept 06 SPS study

- Only a few of ~20 data sets showed meaningful results, not immediately clear why
- Below is one of the good data sets, showing phase change resulting from chromaticity change of 2.5 units (analysis by V. Ranjbar)

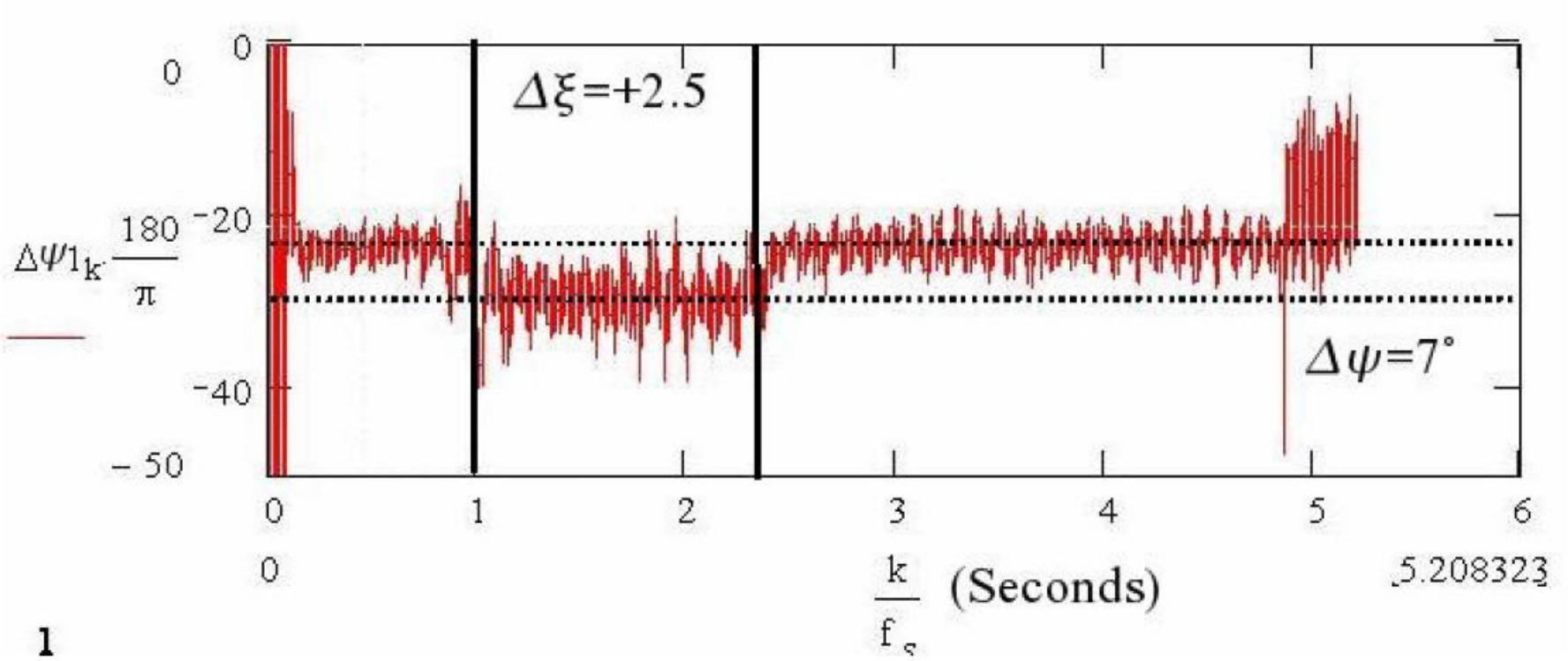

Comparison of theory and experiment at Tevatron with AC dipole excitation
(this study did not use the 3D AFE)

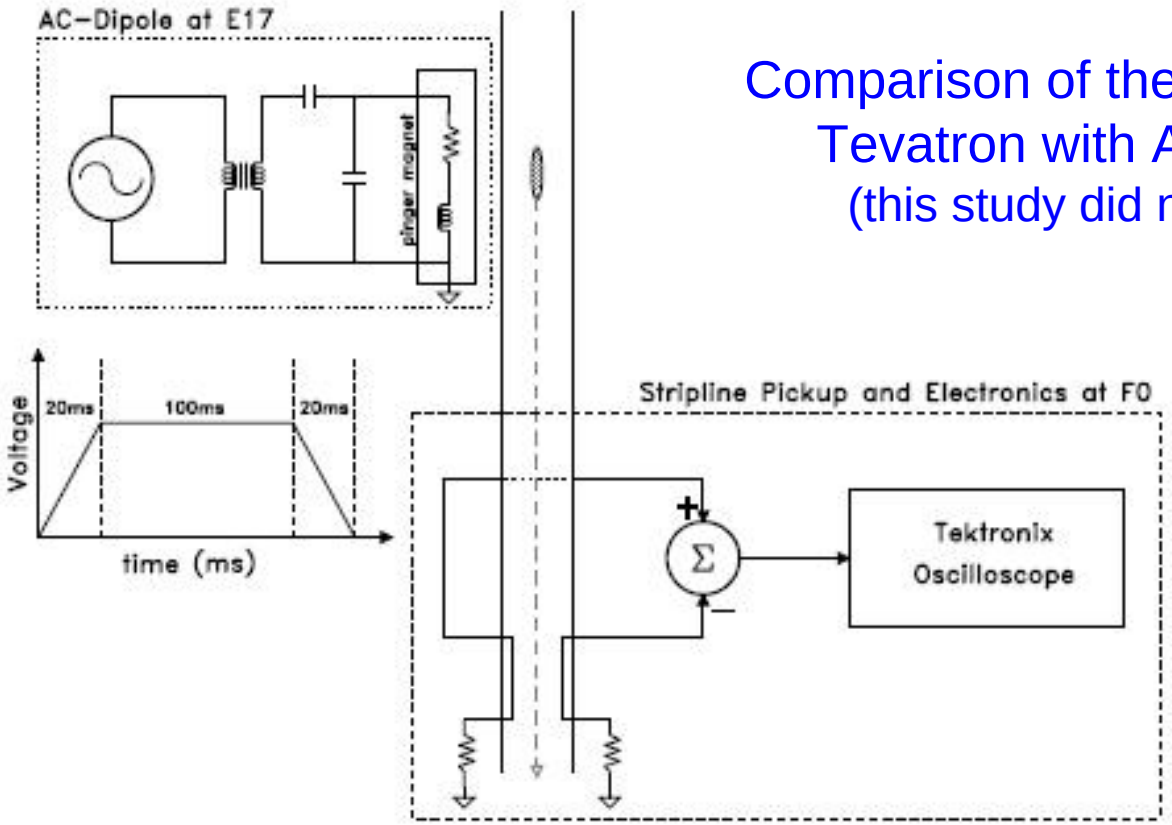

Figure 1: The experimental setup consists of an AC-dipole at E17 and a stripline with its electronics at F0. The AC-dipole is ramped up to its set voltage in 20 ms and stays at flattop for about 100 ms (equivalent to about 10 synchrotron periods or 5000 turns) and then ramped down again in 20 ms.

Comparison of theory and experiment at Tevatron with AC dipole excitation

Conclusions from this experiment and the following data analysis

- there is an unambiguous measurable phase shift between head and tail
- likely candidate for quadratic behavior is transverse impedance
- further verification with BBQ and small amplitude excitation is essential

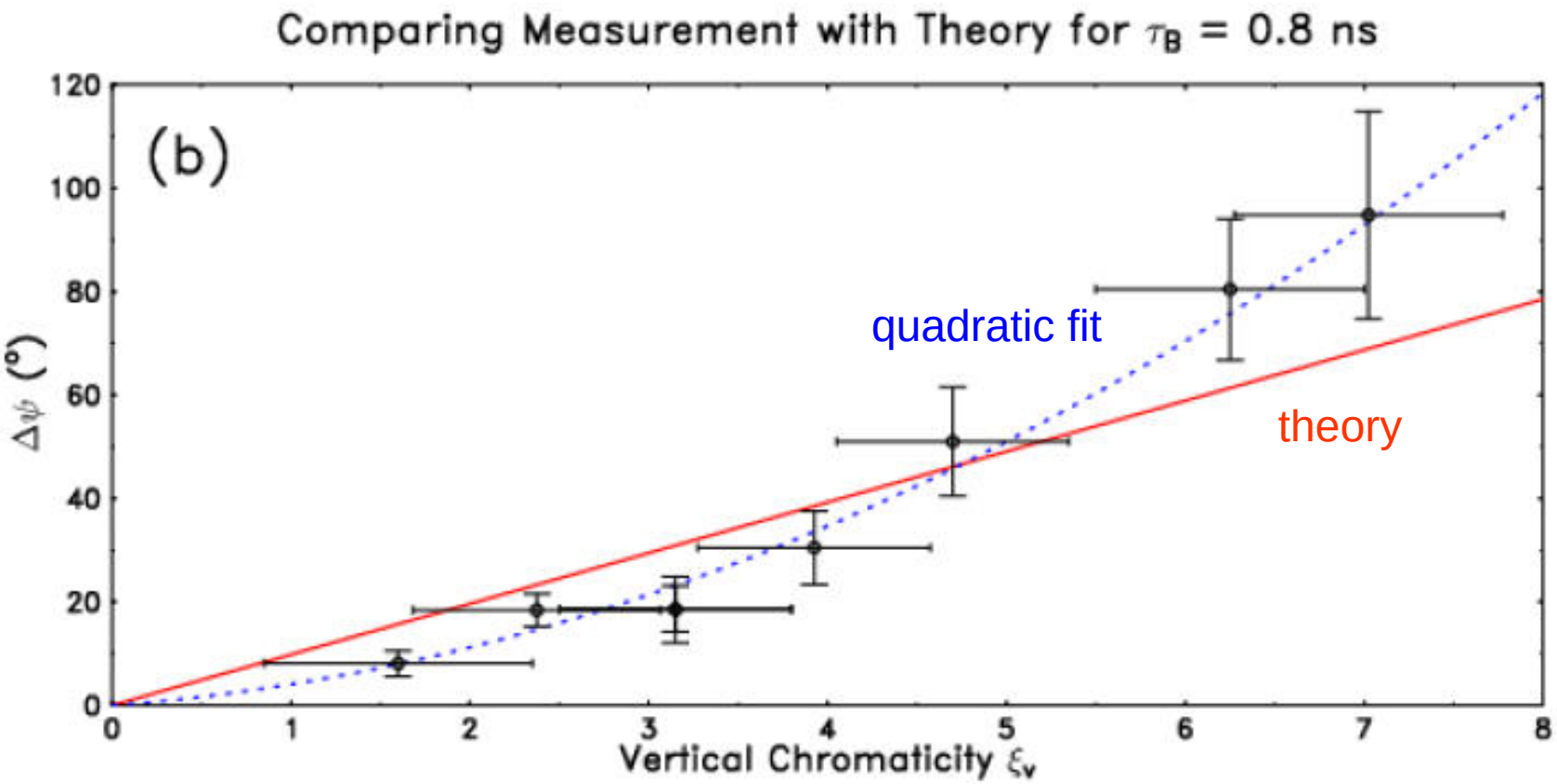

Summary of Continuous H-T

- Theory, simulations, and experiment all indicate that this method is feasible
- non-perturbative character makes it the desired baseline technique
- Further investigation is needed. Areas include:
  - bunch length, possible need for gating
  - filtering – lowpass seems to help
  - pickup configuration
  - detector configuration → Detector configuration proposed by M. Gasior and R. Jones to eliminate pickup reflection and reverse signs of head and tail. Many additional possibilities exist
  - data analysis

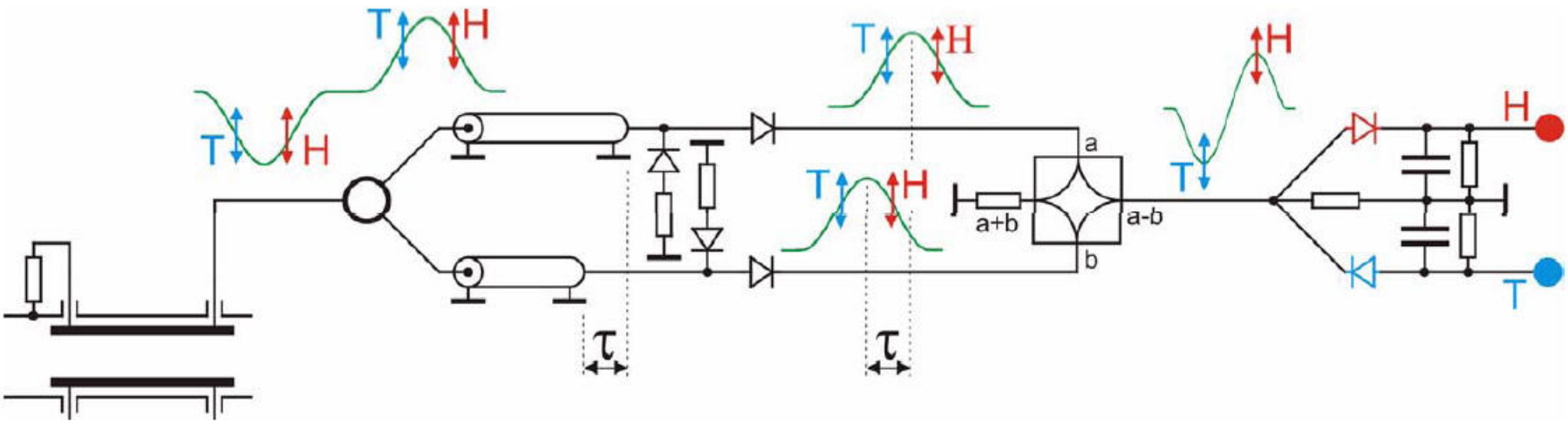

Outline

- Transition Chromaticity Monitor
- ‘Hybrid’ tune tracker?
- Chromaticity measurement and feedback
- **Other Stuff**
  - Beam transfer functions
  - Streaming audio
  - Coupling echoes?

Other Stuff
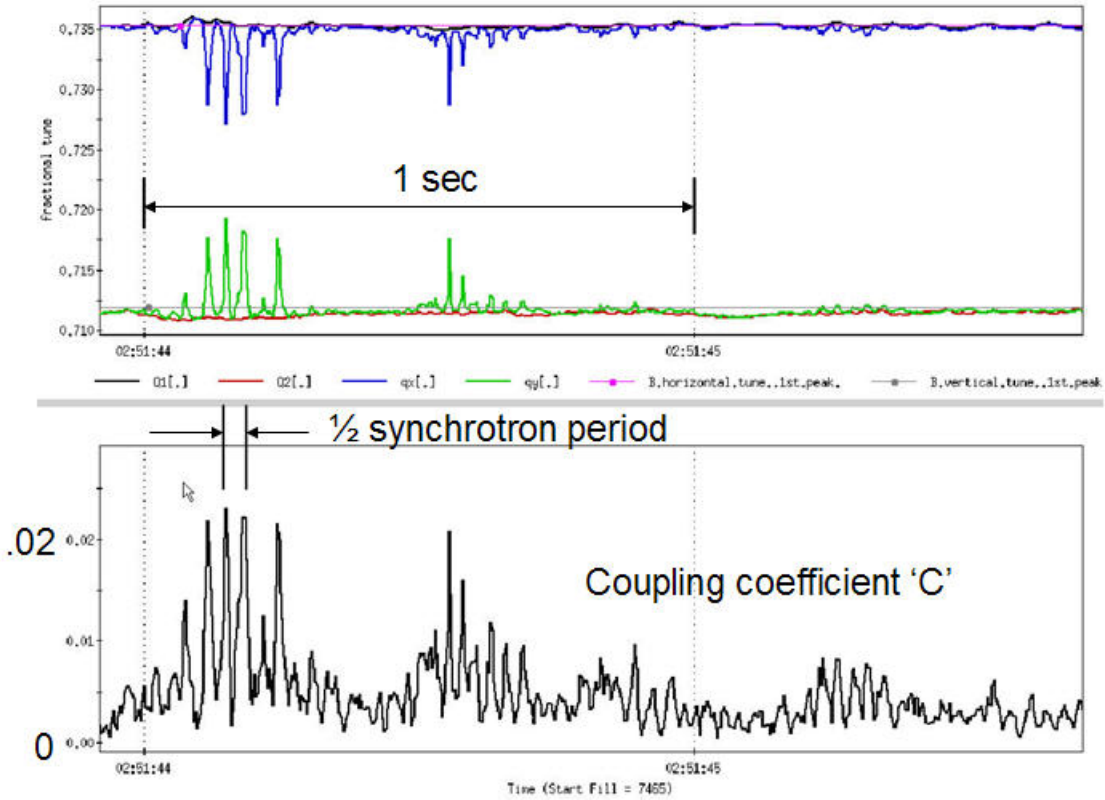
- Beam transfer functions – improvements?
  - White noise? Chirped?
  - Beam-beam transfer functions?
    - Coupling BBTF for LHC orbit feedback - Steinhagen
- Streaming audio of BBQ – Internet radio
- Coupling echoes?